SAR TEKNİK
SANAYİ VE TİCARET LTD. ŞTİ.

ELITE BUS
OTOMOTİV DIŞ TİC. LTD. ŞTİ.

PRODUCT CATALOG 2024

SELECTIVITY · AGILITY · RESOLUTION

- Luggage Racks
- Air Channel Systems
- Service Sets
- Interior Lighting Systems

www.sarteknik.com

LUGGAGE RACK & AIR CHANNEL SYSTEM FOR COACHES 3
Elite Flexi Lux Luggage Rack & Air Channel 4, 5
Flexi Lux Luggage Rack & Air Channel 6, 7
Flexi Lux V2 Luggage Rack & Air Channel 8, 9
Indoor Flexi Lux Luggage Rack & Air Channel 10, 11
Savage Luggage Rack & Air Channel 12, 13
Transformer Luggage Rack & Air Channel 14, 15
AIR CHANNEL SYSTEM FOR COACHES 17
Transformer Air Channel Only 18, 19
Pretty Air Channel Only 20, 21
Pretty V2 Air Channel Only 22, 23
LUGGAGE RACK SYSTEM FOR COACHES 25
Basic Luggage Rack Only 26, 27
Basic L Type Luggage Rack Only 28, 29
Flexi Luggage Rack Only 30, 31
CITY BUS AIR CHANNEL SYSTEM 33
Lego City Concave Air Channel System 34, 35, 36, 37
Lego City Concave V2 Air Channel System 38, 39, 40, 41
Lego City Convex Air Channel System 42, 43, 44, 45
Lego City Flat Air Channel System 46, 47, 48
Lego City Closed-Loop Air Channel System 49, 50, 51
LUGGAGE RACK & AIR CHANNEL SYSTEM FOR MINIBUSES 53
Elite Flexi Lux Luggage Rack & Air Channel 54, 55
Elite Flexi Lux Double Line Luggage Rack & Air Channel 56, 57
Flexi Lux Luggage Rack & Air Channel 58, 59
Flexi Lux Double Line Luggage Rack & Air Channel 60, 61
Classy Luggage Rack & Air Channel With Handrail 62, 63
Classy Luggage Rack & Air Channel Without Handrail 64, 65
Harmony Luggage Rack & Air Channel 66, 67
Zenith Luggage Rack & Air Channel 68, 69
Long Zenith Luggage Rack & Air Channel 70, 71
Wide Zenith Luggage Rack & Air Channel 72, 73
Combo Luggage Rack & Air Channel 74, 75
Curvy Luggage Rack & Air Channel 76, 77
Enigma Luggage Rack & Air Channel 78, 79
Smart Luggage Rack & Air Channel 80, 81
AIR CHANNEL SYSTEM FOR MINIBUSES 83
Slim Lighting Air Channel Only 84, 85
Pretty Air Channel Only 86, 87
Pretty V2 Air Channel Only 88, 89
Integral Air Channel Only 90, 91
Balance Air Channel Only 92, 93
LUGGAGE RACK SYSTEM FOR MINIBUSES 95
Zenith Luggage Rack Only Double Line 96, 97
Wide Zenith Luggage Rack Only Double Line 98, 99
Long Zenith Luggage Rack Only Double Line 100, 101
Harmony Luggage Rack Only 102, 103, 104, 105
Classy Luggage Rack Only 106, 107, 108, 109
Flexi Luggage Rack Only 110, 111
Basic L Type Luggage Rack Only 112, 113
Basic Luggage Rack Only 114, 115
Smart Luggage Rack Only 116, 117
SERVICE SETS, SPACERS, READING LIGHTS, AIR DIFFUSERS 119
Elegant Service Set with Touch Buttons 120
Elegant Service Set with Push Buttons 121
Standart Intense Service Set 122
Luxury Intense Service Set 123
Standart Intense Service Set with Whell Air Diffuser 124
Luxury Intense Service Set with Whell Air Diffuser 125
Drops Service Set 126
Drops Narrow Service Set 127
Junior Service Set 128, 129
Junior Spacer 130
Elegant Spacer 131
Elliptic Spacer 132
Plain Single Layer Spacer 133
Plain Double Layer Spacer 134
Flat Spacer 135
Intense Single Service Sets 136
Intense Single Service Sets Whell Design 137
Intense Narrow Single Service Sets 138
Intense Narrow Service Sets Whell Design 139
Intense Single Reading Light 140
Cascade Reading Light 141
Intense Single Air Diffuser 142
Drops Loudspeaker 143
INTERIOR LIGHTING PROFILE 145
Elite Below Window Lighting Profile V1 146, 147
Elite Below Window Lighting Profile V2 148, 149
Sirius Double Lighted Below Window Profile 150, 151
Sirius Double Lighted Below Window Profile with Curtain Rail 152, 153
Slim Lighted Ceiling Lighting 154
Super Single Ceiling Lighting 155
Trendy Ceiling Lighting 156
Rectangular Ceiling Lighting 157
Step Lighting Profile 158, 159
Downward Lighted Step Profile 160, 161
Convex Corner Part 90° 162
Concave Corner Part 90° 163
Convex Corner 135° 164
Concave Corner 135° 165
Only Handrail Profile 166, 167

Luggage Rack & Air Channel Systems For Coaches

ELITE FLEXI LUX LUGGAGE RACK & AIR CHANNEL

ELITE FLEXI LUX LUGGAGE RACK & AIR CHANNEL

	Elite Flexi Lux LR & AC	Standart	Optional
		•	
1	Indirect Ceiling Lighting	•	
2	Ceiling Lighting	•	
3	Second Ceiling Lighting (Night Light)		
4	Indirect Loading Panel Lighting		
5	Handrail Slim Line Lighting	•	
6	Handrail Lighting	•	
7	Corridor Side Slim Line Lighting	•	
8	Window Side Slim Line Lighting	•	
9	Window Side Lighting Channel		

Any lighting position can be canceled, changed or added.

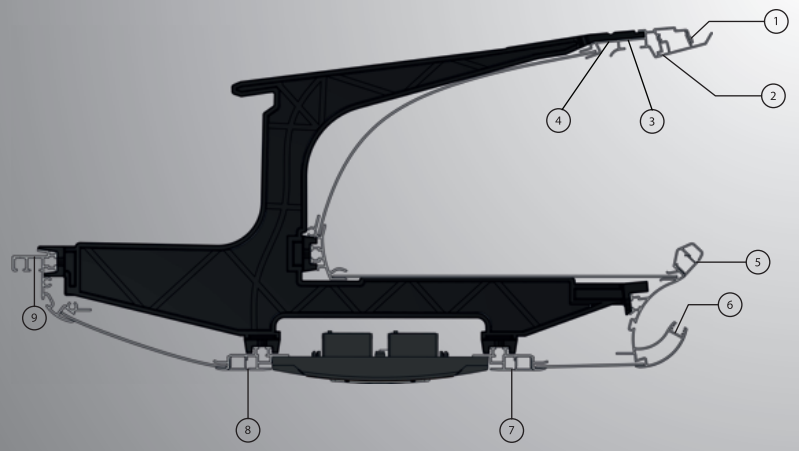

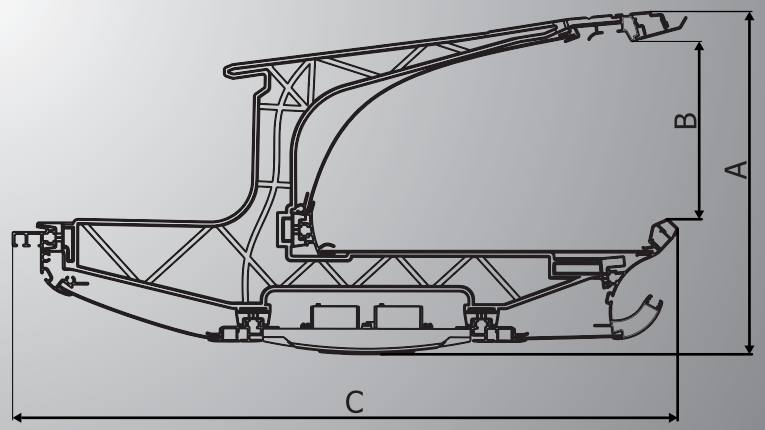

FLEXI LUX LUGGAGE RACK & AIR CHANNEL

FLEXI LUX LUGGAGE RACK & AIR CHANNEL

	Flexi Lux LR & AC	Standart	Optional
1	Indirect Ceiling Lighting	•	
2	Ceiling Lighting	•	
3	Second Ceiling Lighting (Night Light)	•	
4	Indirect Loading Panel Lighting		
5	Handrail Lighting	•	
6	Window Side Lighting Channel		

Any lighting position can be canceled, changed or added.

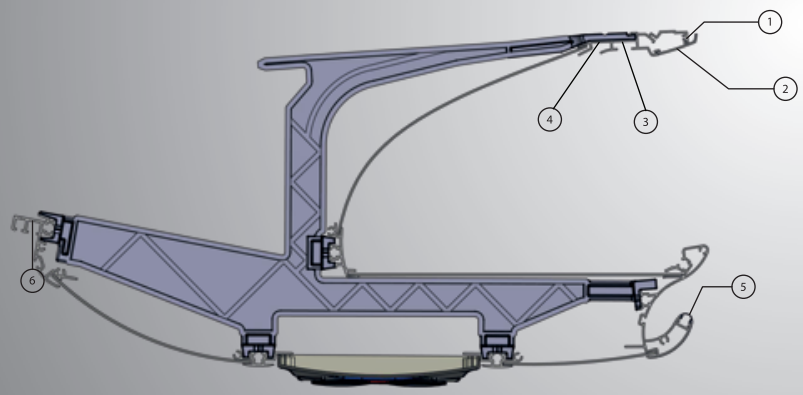

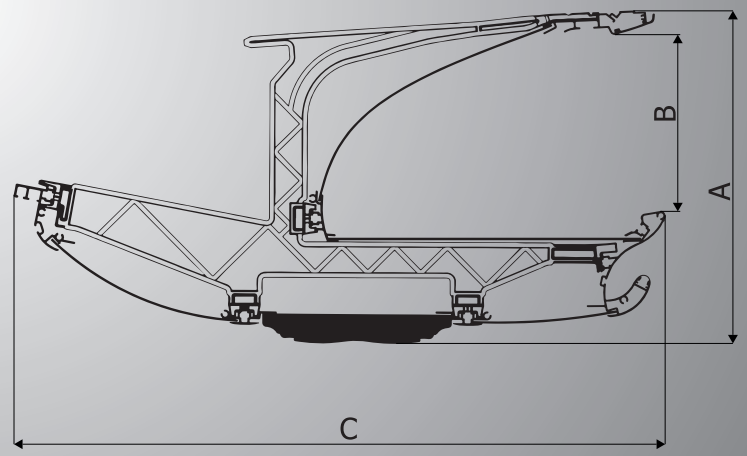

FLEXI LUX V2 LUGGAGE RACK & AIR CHANNEL

FLEXI LUX V2 LUGGAGE RACK & AIR CHANNEL

Flexi Lux V2 LR & AC	Standart	Optional
1 Indirect Ceiling Lighting	•	
2 Ceiling Lighting	•	
3 Second Ceiling Lighting (Night Light)	•	
4 Indirect Loading Panel Lighting		
5 Handrail Lighting	•	
6 Window Side Lighting Channel		

Any lighting position can be canceled, changed or added.

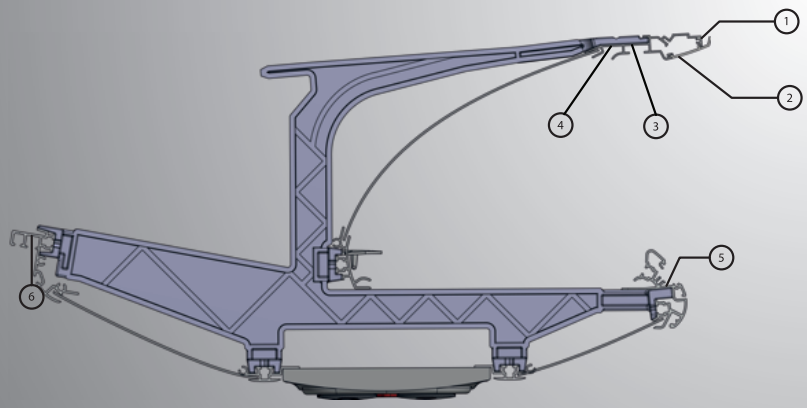

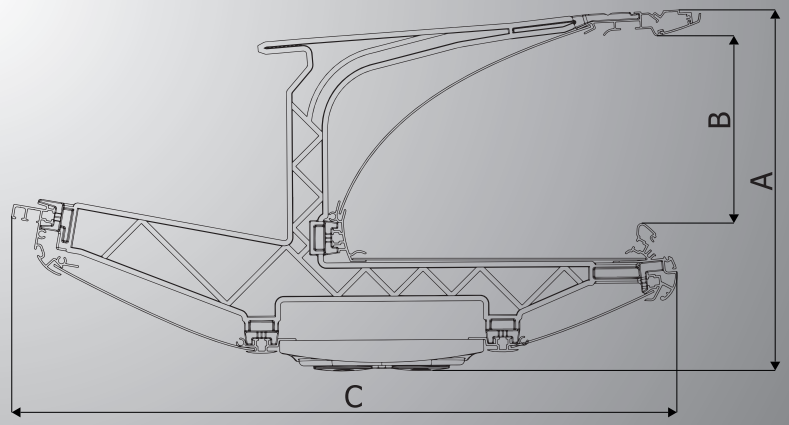

INDOOR FLEXI LUX LUGGAGE RACK & AIR CHANNEL

INDOOR FLEXI LUX LUGGAGE RACK & AIR CHANNEL

Indoor Flexi Lux LR & AC	Standart	Optional
1 Indirect Ceiling Lighting	•	
2 Ceiling Lighting		
3 Handrail Lighting	•	
4 Window Side Lighting Channel		
5 Indirect Loading Panel Lighting		

Any lighting position can be canceled, changed or added.

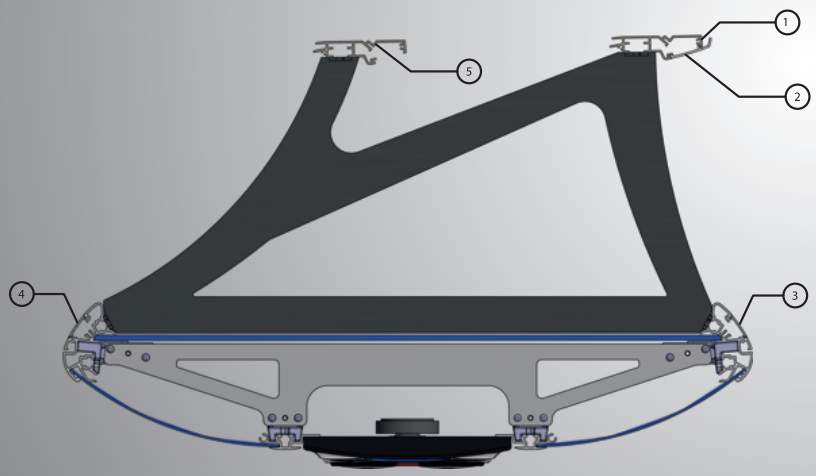

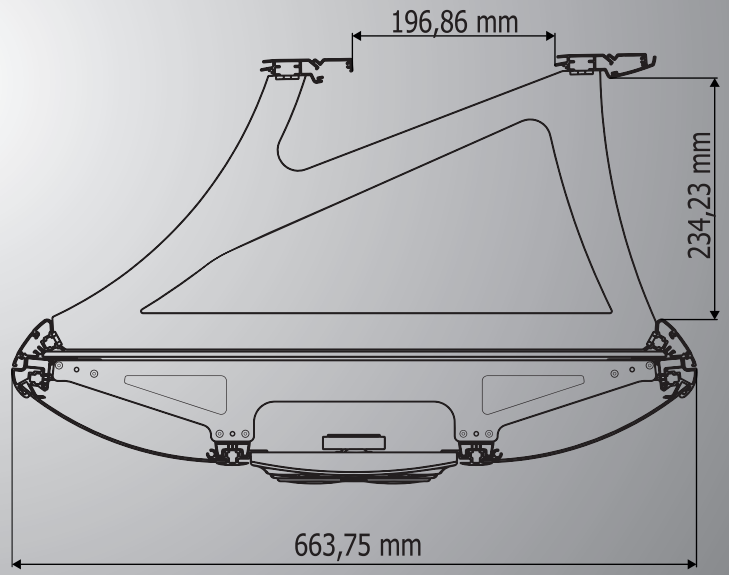

SAVAGE LUGGAGE RACK & AIR CHANNEL

SAVAGE LUGGAGE RACK & AIR CHANNEL

Savage LR & AC	Standart	Optional
1 Indirect Ceiling Lighting		
2 Ceiling Lighting	•	
3 Handrail Lighting	•	

Any lighting position can be canceled, changed or added.

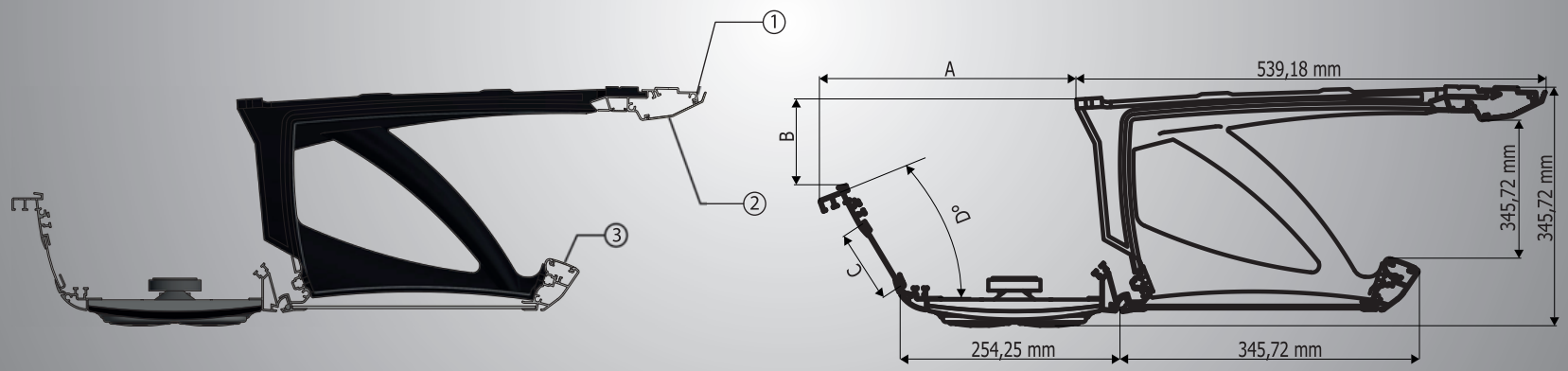

Flexible Dimension: A, B, C, D°

TRANSFORMER LUGGAGE RACK & AIR CHANNEL

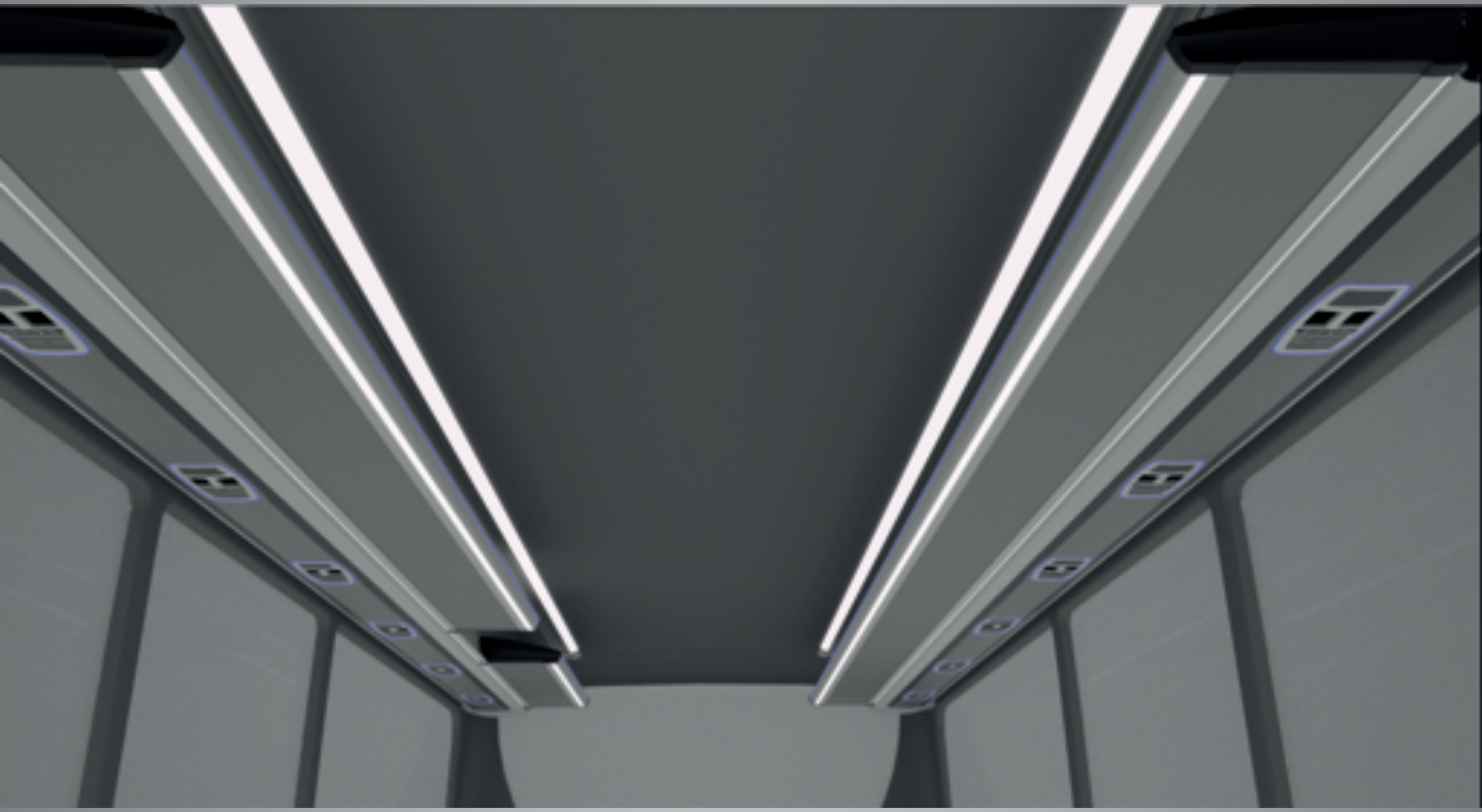

TRANSFORMER LUGGAGE RACK & AIR CHANNEL

	Transformer LR & AC	Standart	Optional
1	Indirect Ceiling Lighting	•	
2	Ceiling Lighting	•	
3	Second Ceiling Lighting (Night Light)	•	
4	Indirect Loading Panel Lighting		
5	Handrail Slim Line Lighting		
6	Corridor Side Lighting Channel		
7	Middle Line Lighting		
8	Window Side Lighting Channel		

Any lighting position can be canceled, changed or added.

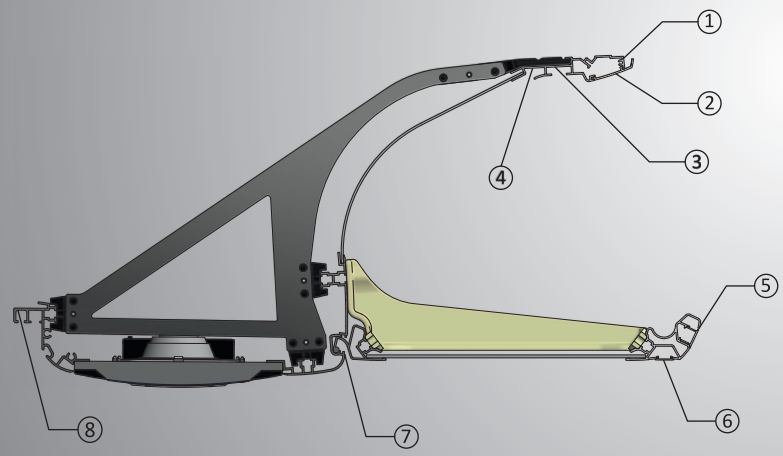

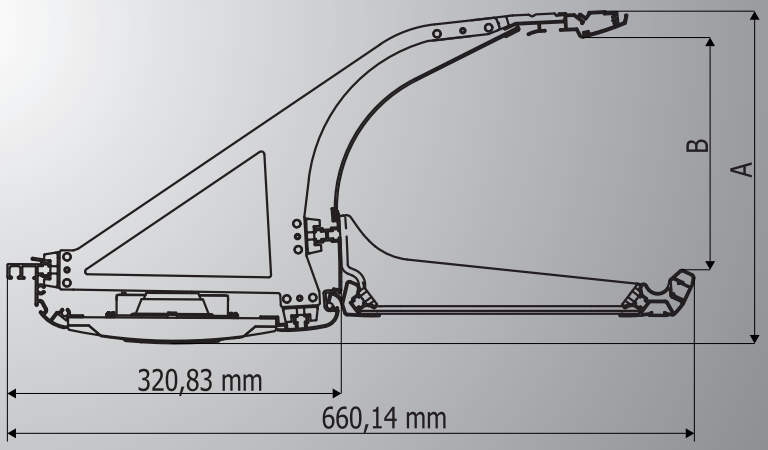

Flexible Dimension: A, B

NOTES

Air Channel Systems For Coaches

TRANSFORMER AIR CHANNEL ONLY

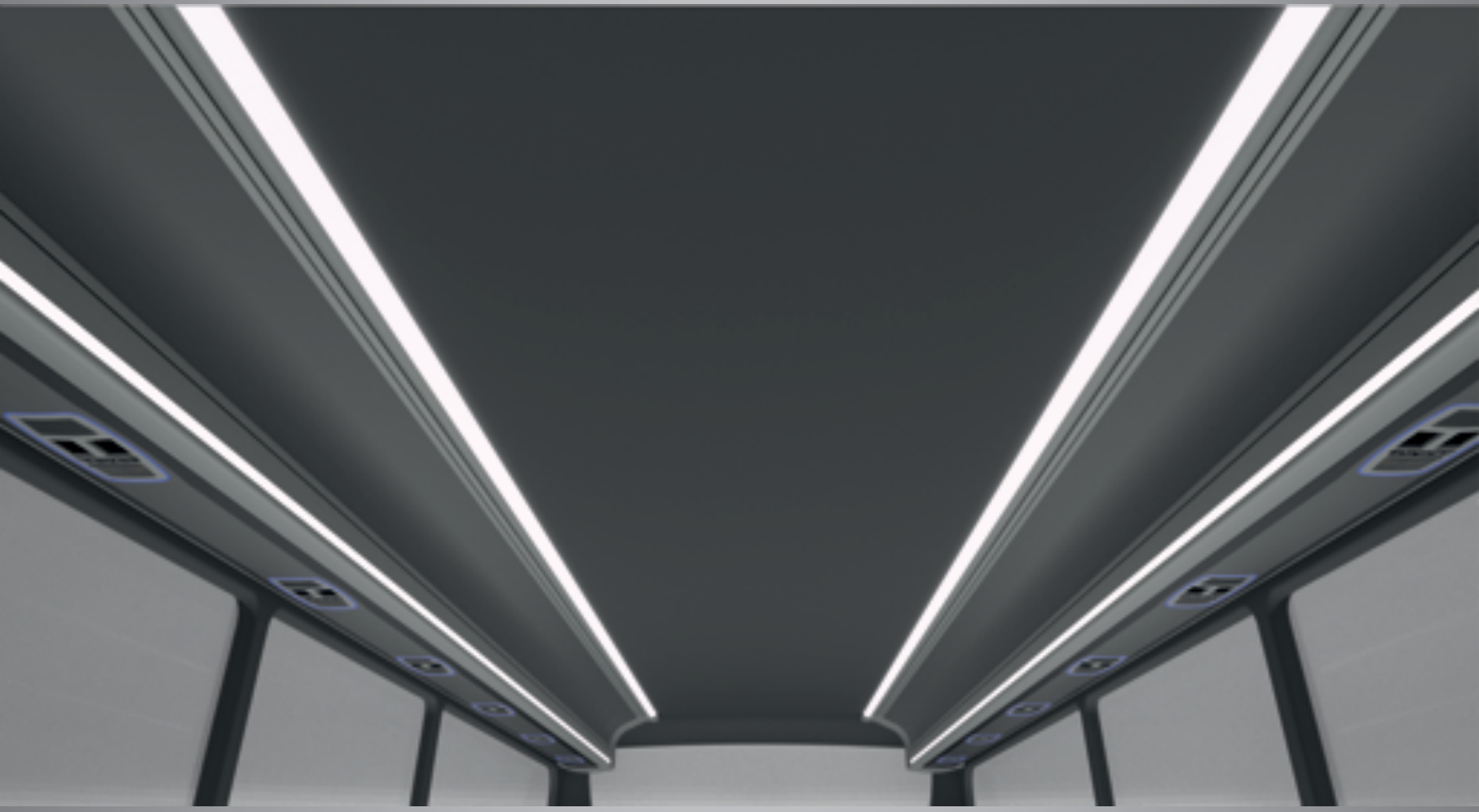

TRANSFORMER AIR CHANNEL ONLY

	Transformer AC Only	Standart	Optional
1	Indirect Ceiling Lighting		
2	Ceiling Lighting	•	
3	Second Ceiling Lighting (Night Light)	•	
4	Indirect Loading Panel Lighting		
5	Corridor Side Lighting Channel		
6	Window Side Lighting Channel		

Any lighting position can be canceled, changed or added.

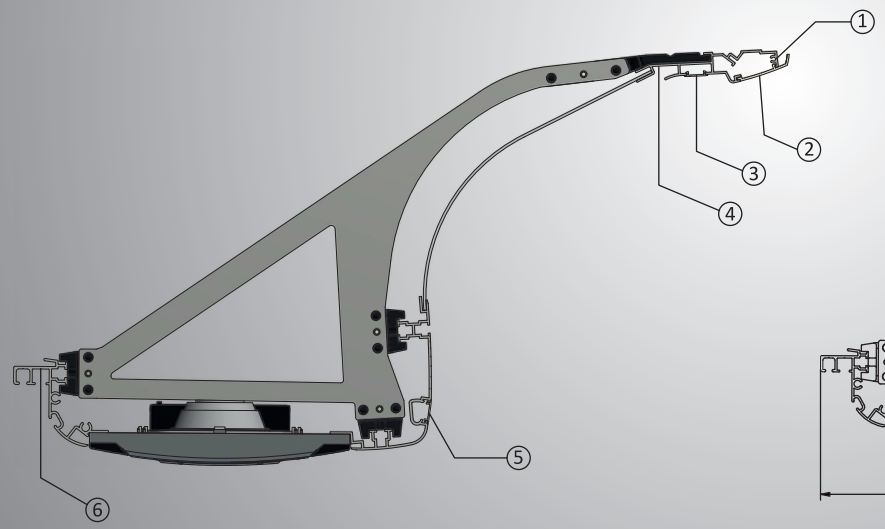

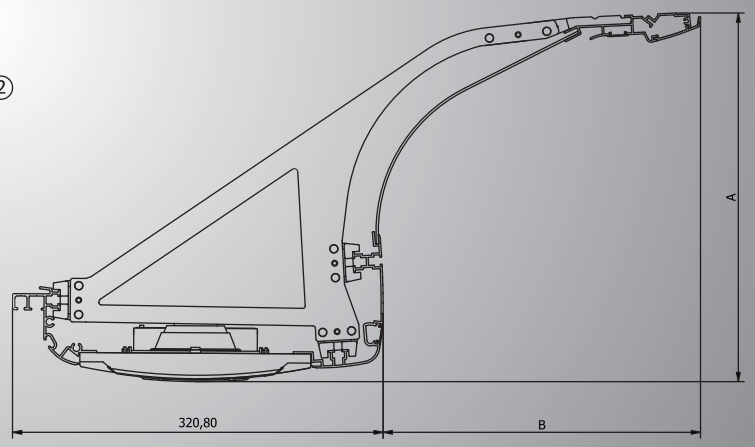

PRETTY AIR CHANNEL ONLY

	Pretty Air Channel Only	Standart	Optional
1	Indirect Ceiling Lighting	•	
2	Ceiling Lighting	•	
3	Second Ceiling Lighting (Night Light)		
4	Second Indirect Ceiling Lighting		
5	Slim Line Lighting	•	
6	Window Side Lighting Channel	•	

Any lighting position can be canceled, changed or added.

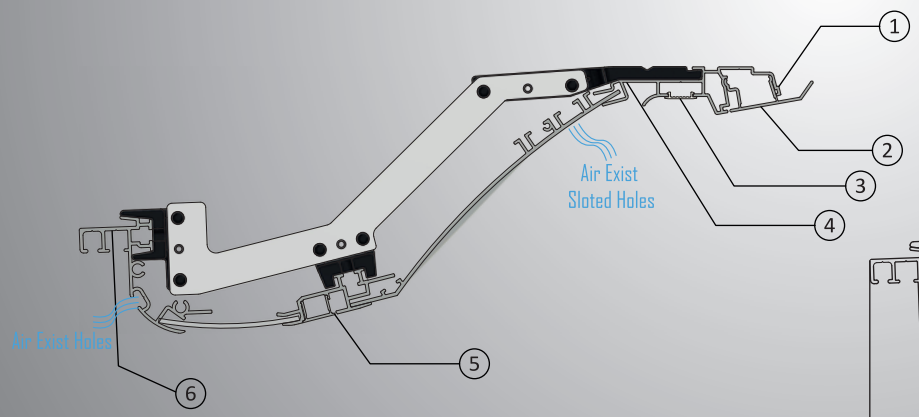

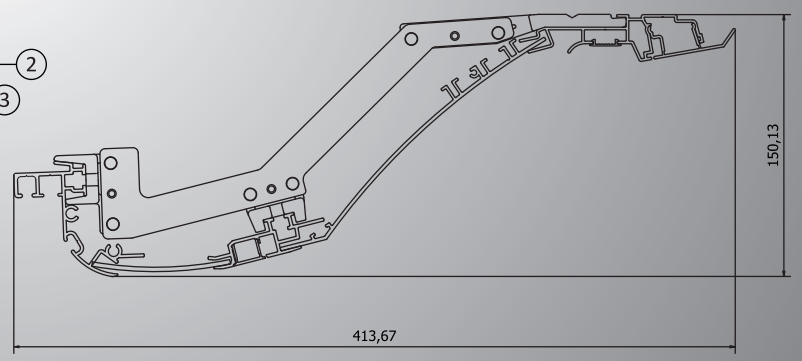

PRETTY V2 AIR CHANNEL ONLY

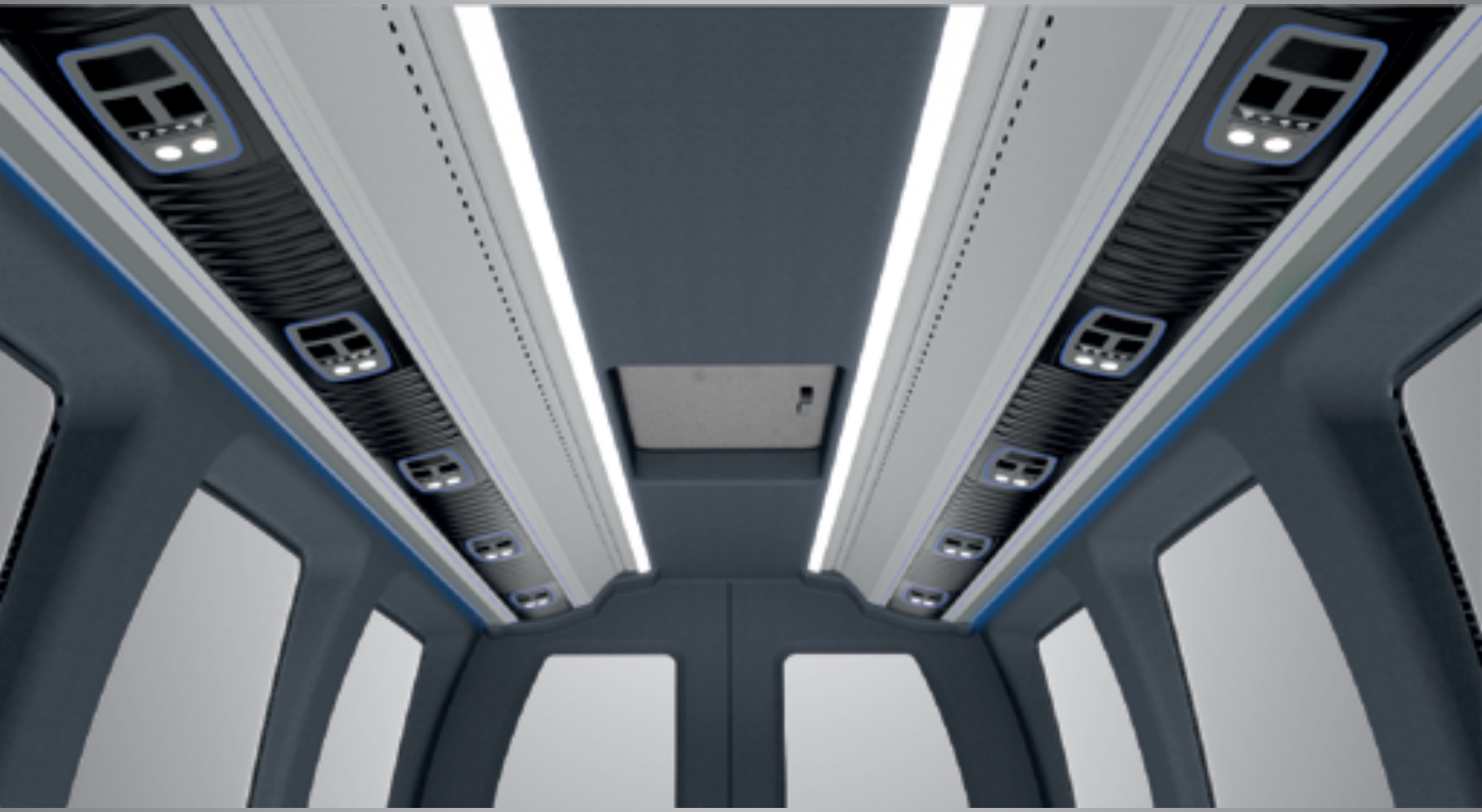

PRETTY V2 AIR CHANNEL ONLY

Pretty V2 Air Channel Only	Standart	Optional
1 Indirect Ceiling Lighting	•	
2 Ceiling Lighting	•	
3 Second Ceiling Lighting (Night Light)		
4 Second Indirect Ceiling Lighting		
5 Corridor Side Slim Line Lighting	•	
6 Window Side Slim Line Lighting	•	
7 Window Side Lighting Channel	•	

Any lighting position can be canceled, changed or added.

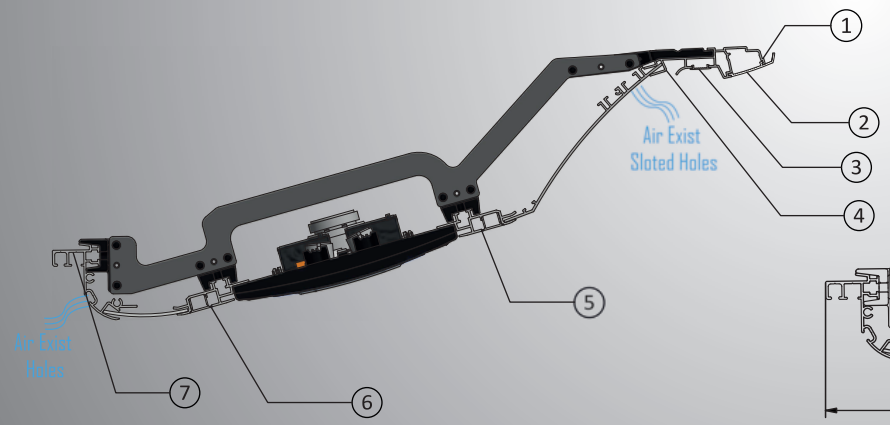

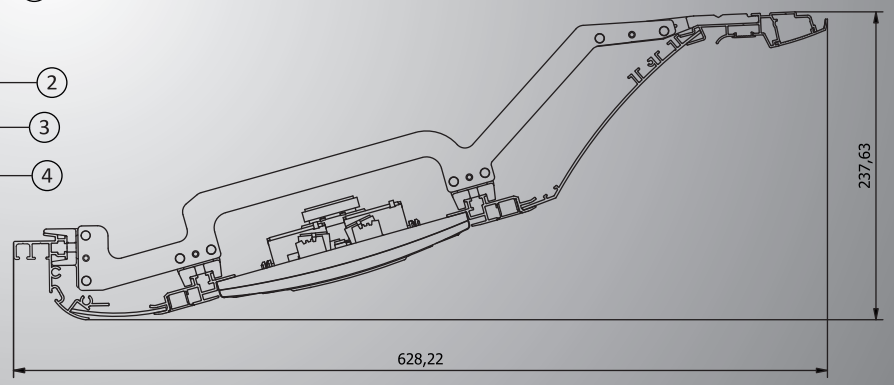

NOTES

Luggage Rack Systems For Coaches

BASIC LUGGAGE RACK ONLY

BASIC LUGGAGE RACK ONLY

Basic Luggage Rack Only	Standart	Optional
1 Indirect Ceiling Lighting		
2 Ceiling Lighting	•	
3 Handrail Lighting	•	
4 Indirect Loading Panel Lighting		

Any lighting position can be canceled, changed or added.

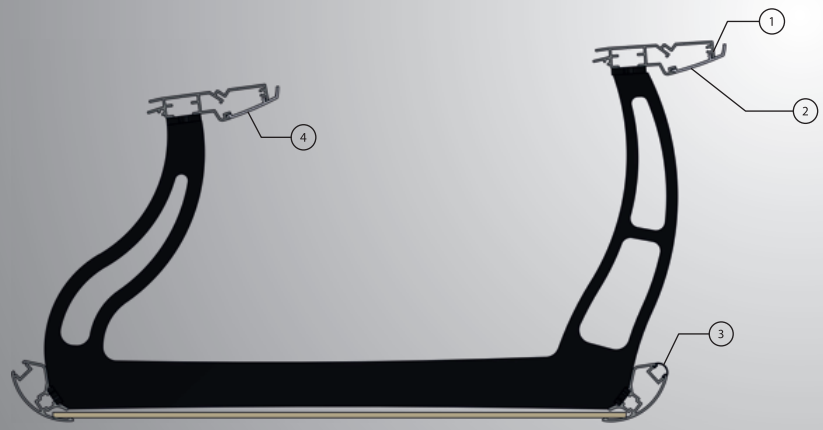

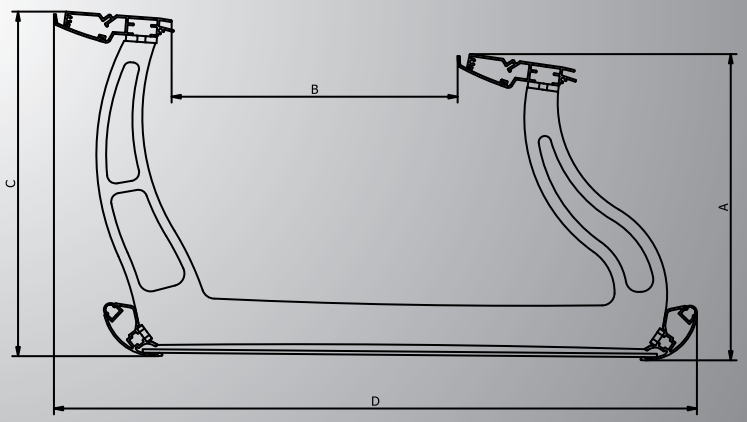

BASIC L TYPE LUGGAGE RACK ONLY

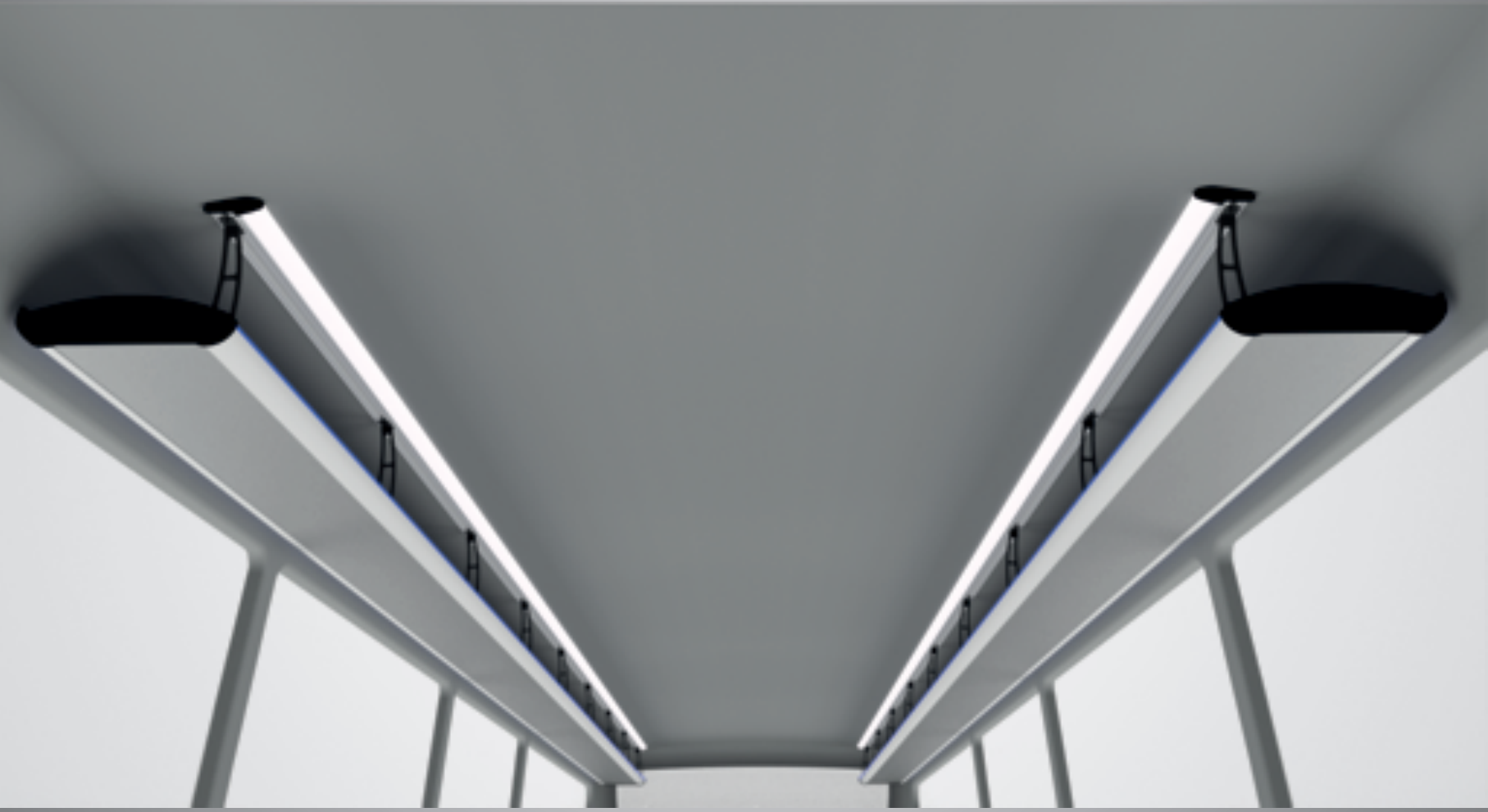

BASIC L TYPE LUGGAGE RACK ONLY

Basic L Type Luggage Rack Only	Standart	Optional
1 Indirect Ceiling Lighting	•	
2 Ceiling Lighting		•
3 Handrail Lighting		•

Any lighting position can be canceled, changed or added.

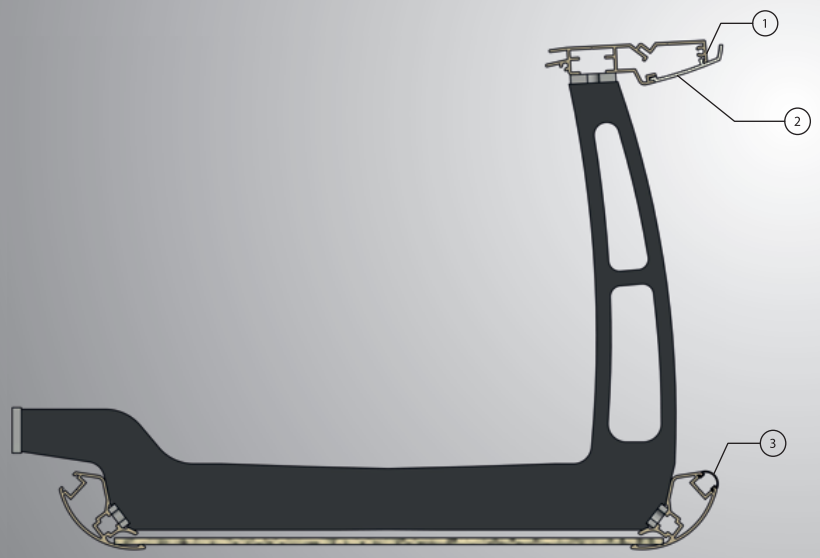

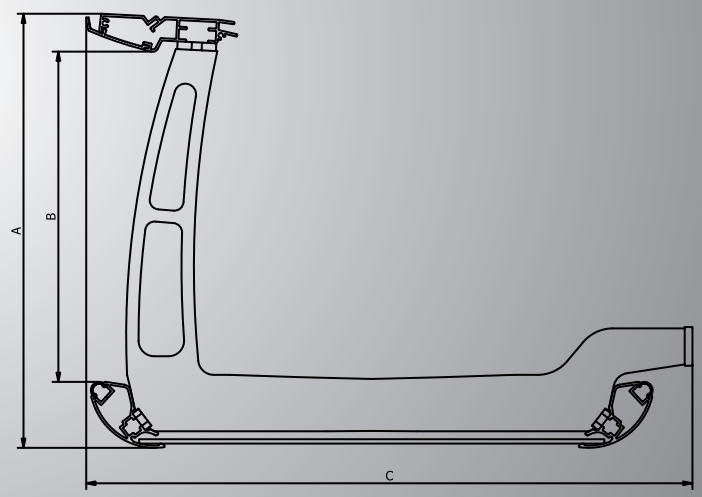

Product Code: 034_01

FLEXI LUGGAGE RACK ONLY

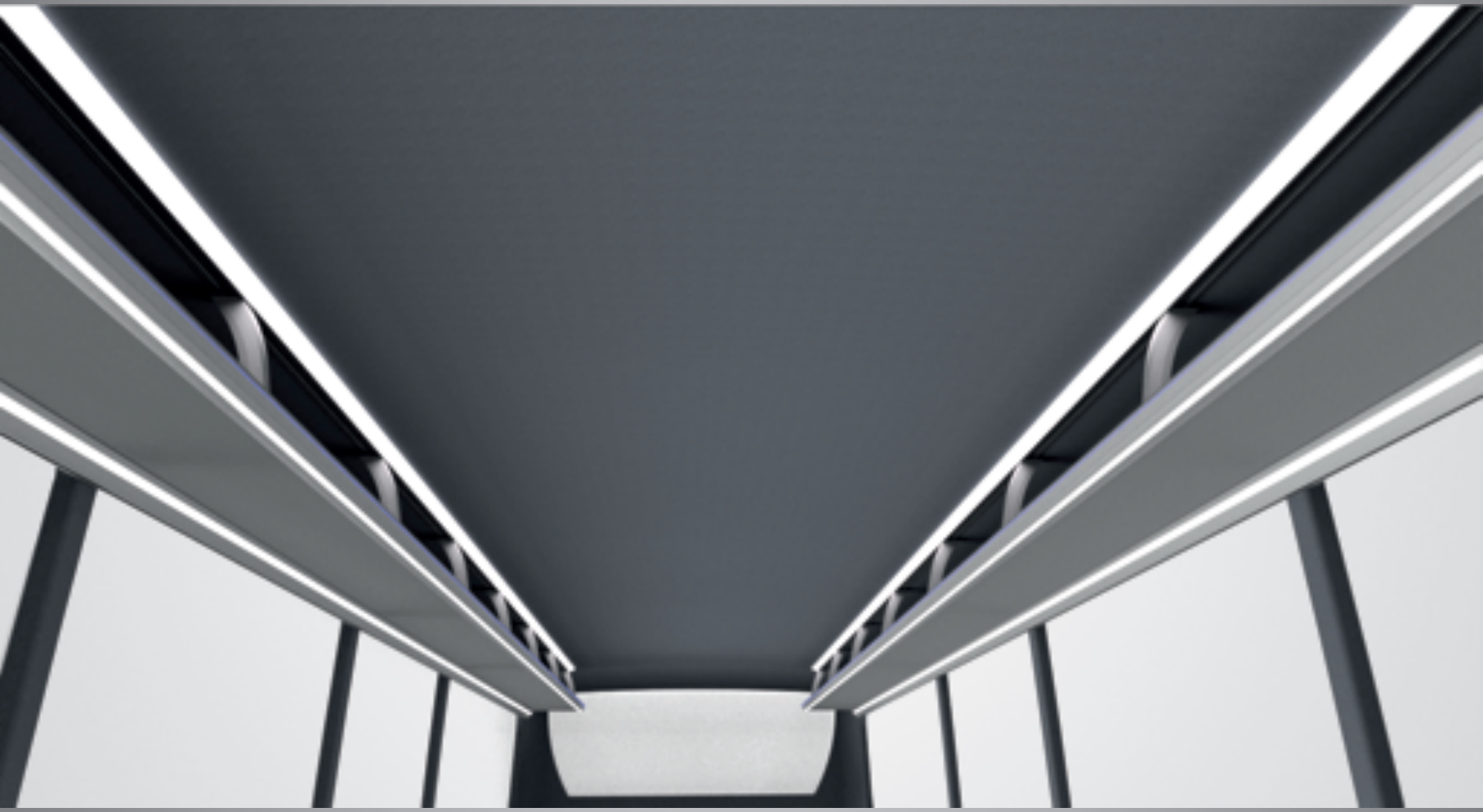

FLEXI LUGGAGE RACK ONLY

Flexi Luggage Rack Only	Standart	Optional
1 Indirect Ceiling Lighting		
2 Ceiling Lighting	•	
3 Handrail Slim Line Lighting		
4 Corridor Side Lighting Channel (Or Cascade Reading Lights)	•	
5 Window Side Lighting Channel (Or Cascade Reading Lights)		
6 Indirect Loading Panel Lighting		

Any lighting position can be canceled, changed or added.

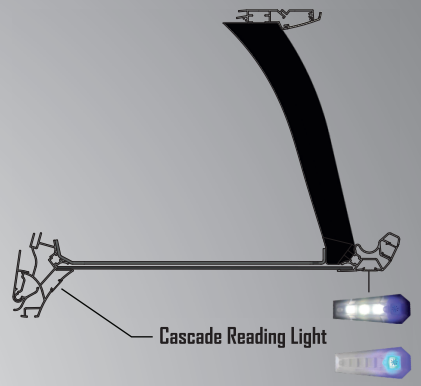

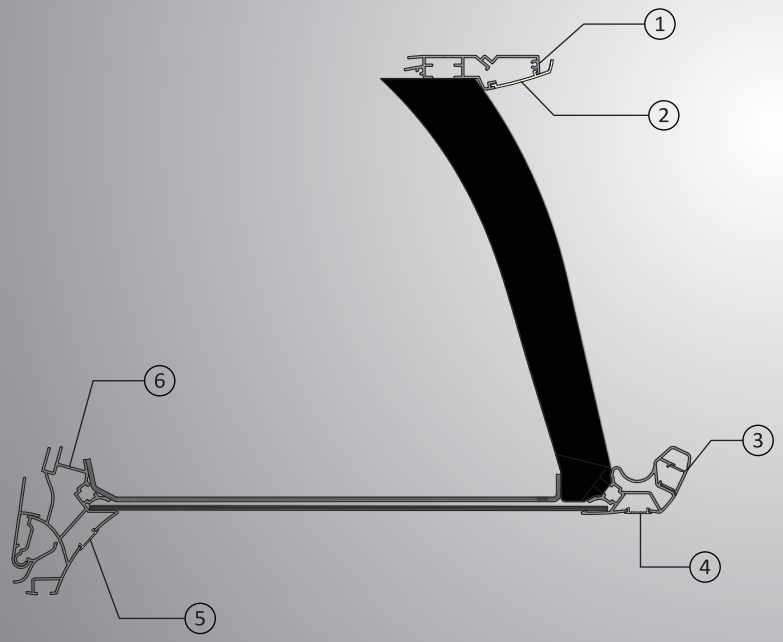

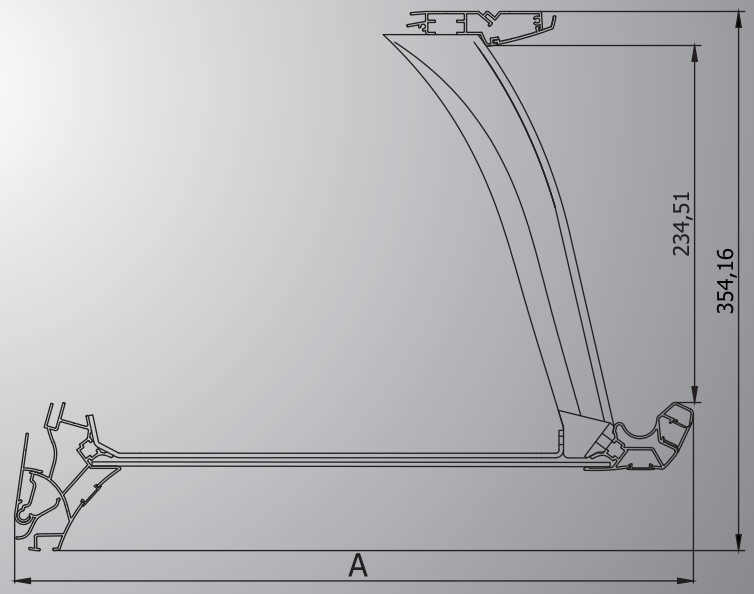

NOTES

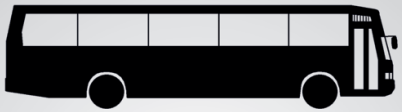

City Bus Air Channel Systems

LEGO CITY CONCAVE AIR CHANNEL SYSTEM

LEGO CITY CONCAVE AIR CHANNEL SYSTEM

LEGO CITY CONCAVE AIR CHANNEL SYSTEM

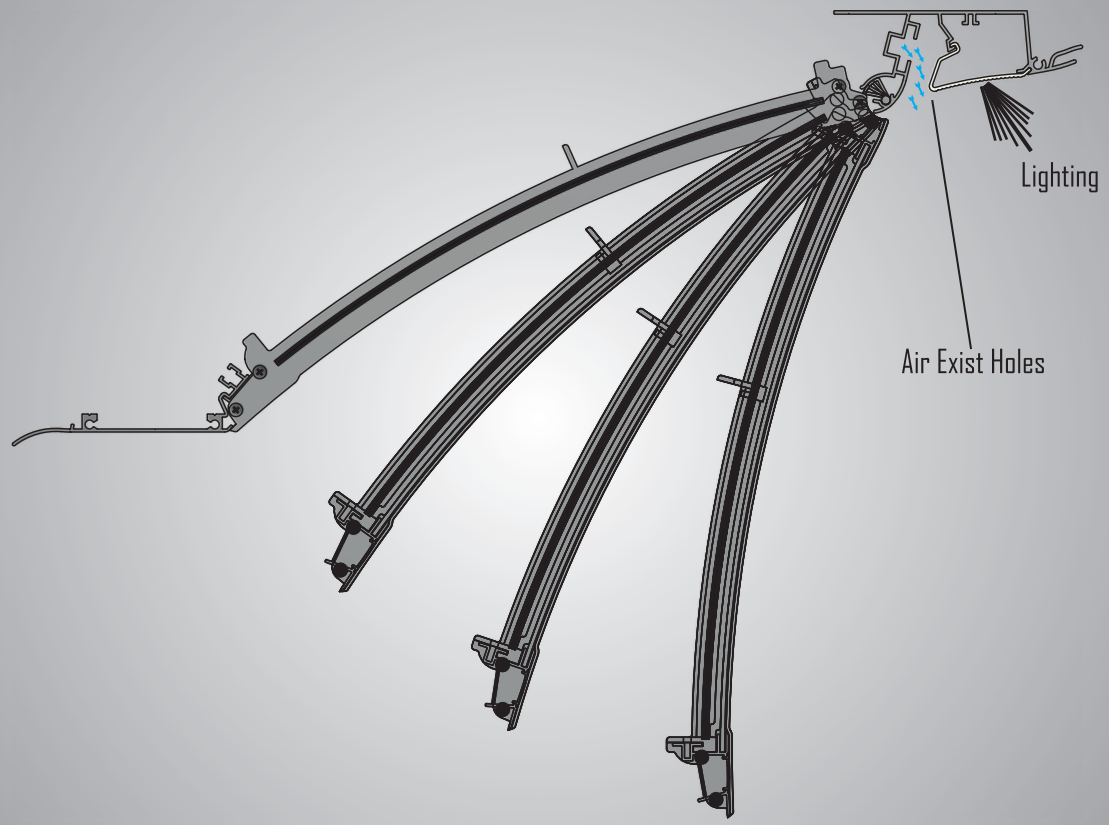

LEGO CITY CONCAVE AIR CHANNEL SYSTEM

Ceiling Profile Options

AP_0024

AP_0044

AP_0174

Flap Assembly Options

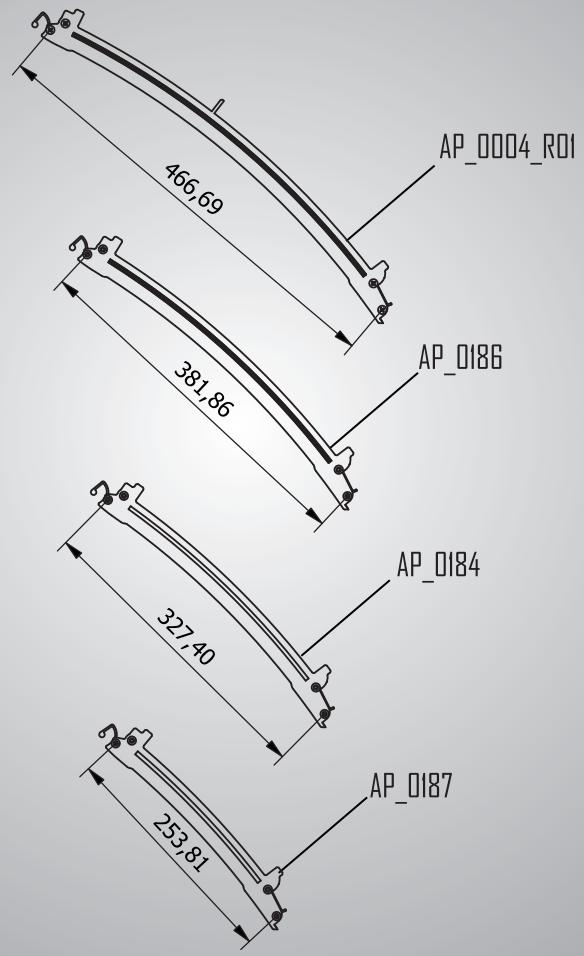

Window Profile Options

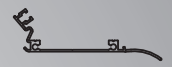

ME_0048

ME_0049

AP_0160

AP_0204

LEGO CITY CONCAVE V2 AIR CHANNEL SYSTEM

LEGO CITY CONCAVE V2 AIR CHANNEL SYSTEM

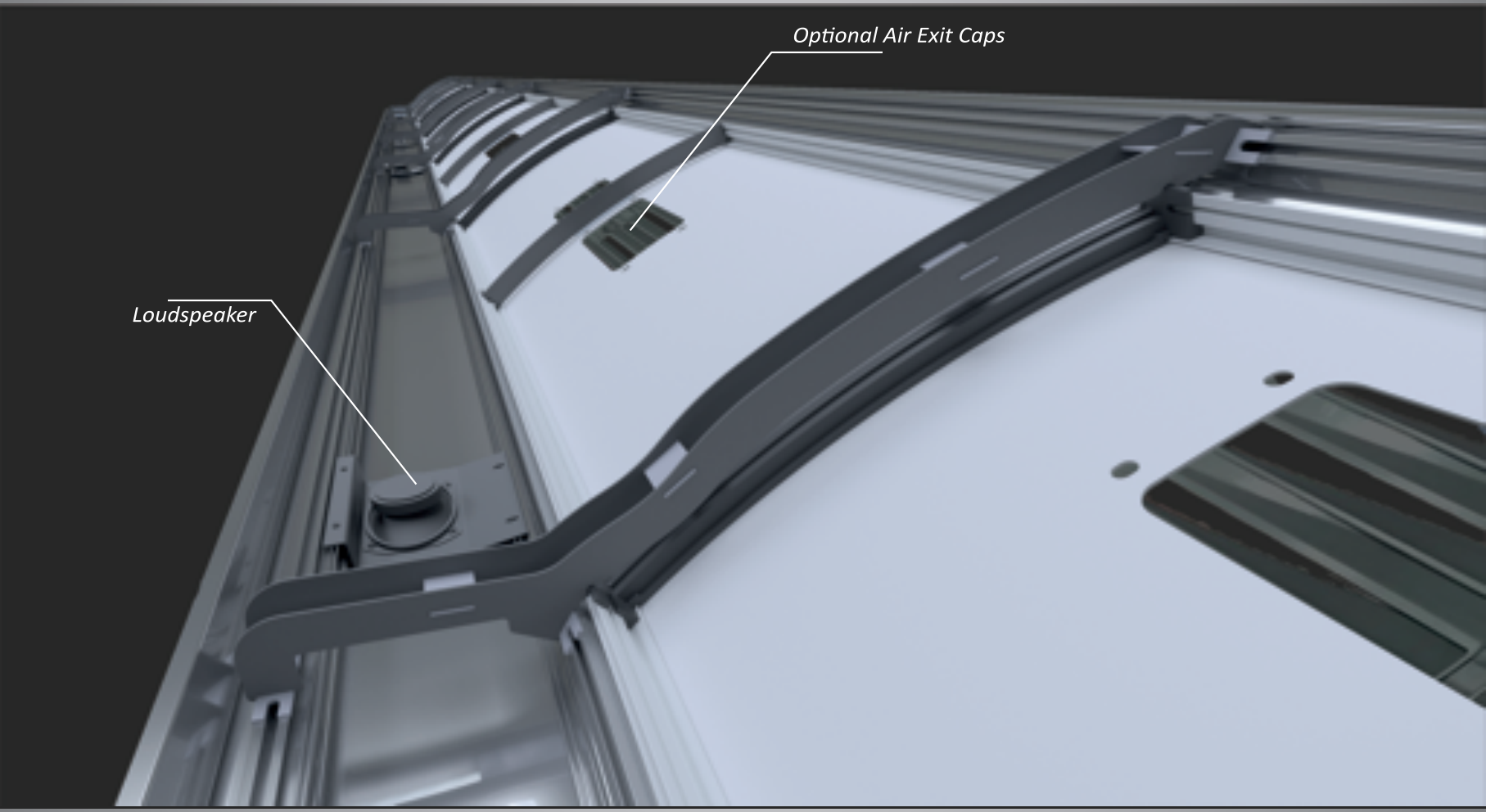

LEGO CITY CONCAVE V2 AIR CHANNEL SYSTEM

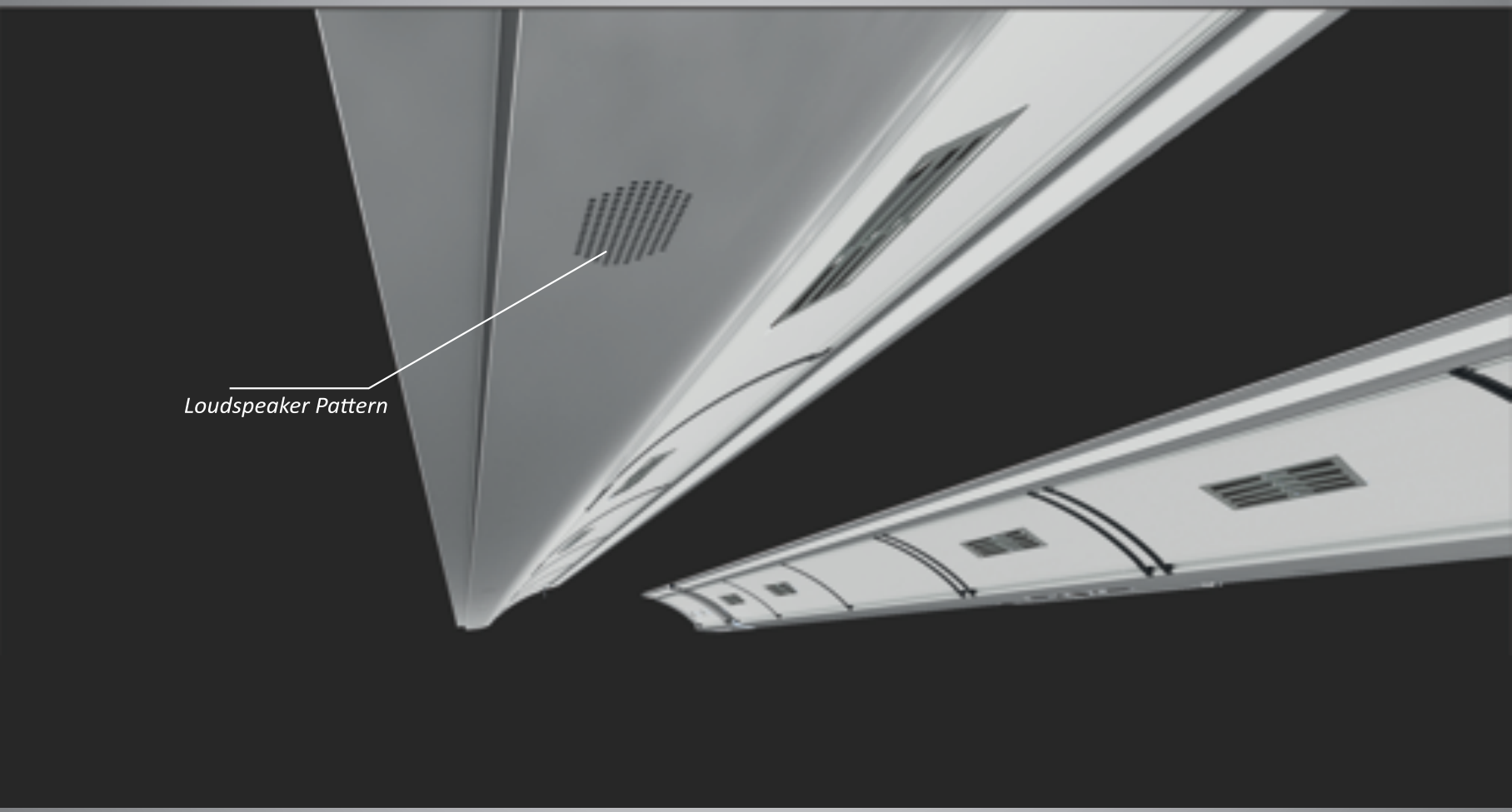

LEGO CITY CONCAVE V2 AIR CHANNEL SYSTEM

Ceiling Profile Options

AP_0044

Flap Assembly Options

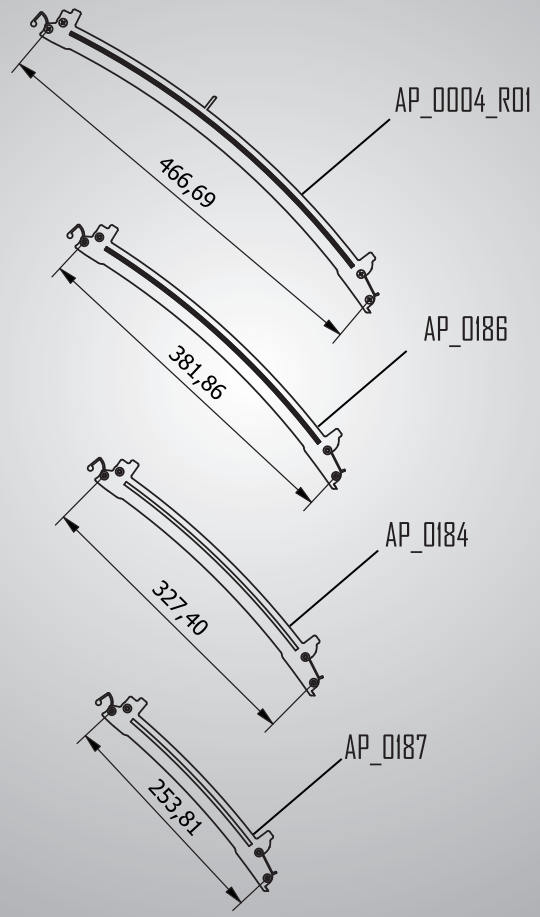

Window Profile Options

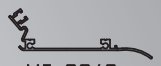

ME_0048

ME_0049

AP_0160

AP_0204

LEGO CITY CONVEX AIR CHANNEL SYSTEM

LEGO CITY CONVEX AIR CHANNEL SYSTEM

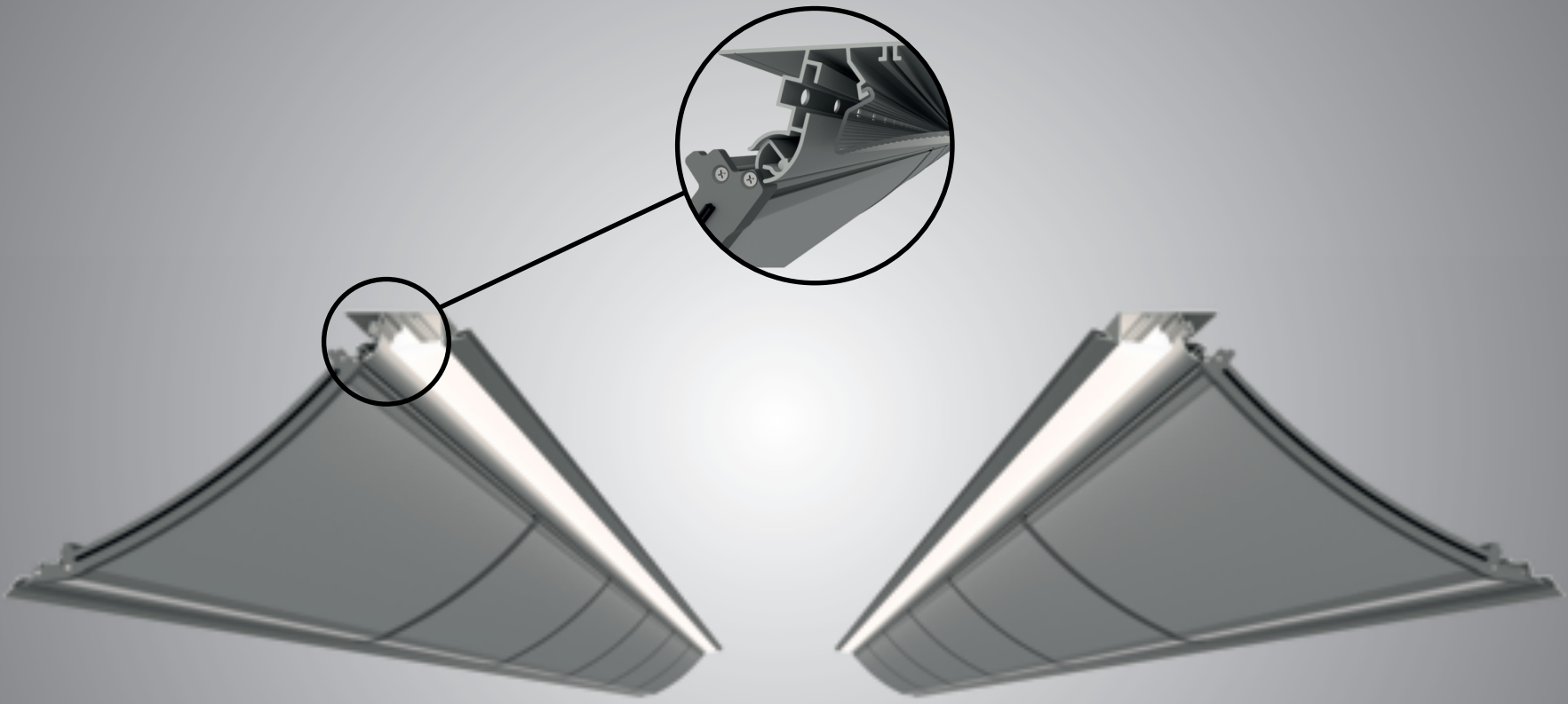

LEGO CITY CONVEX AIR CHANNEL SYSTEM

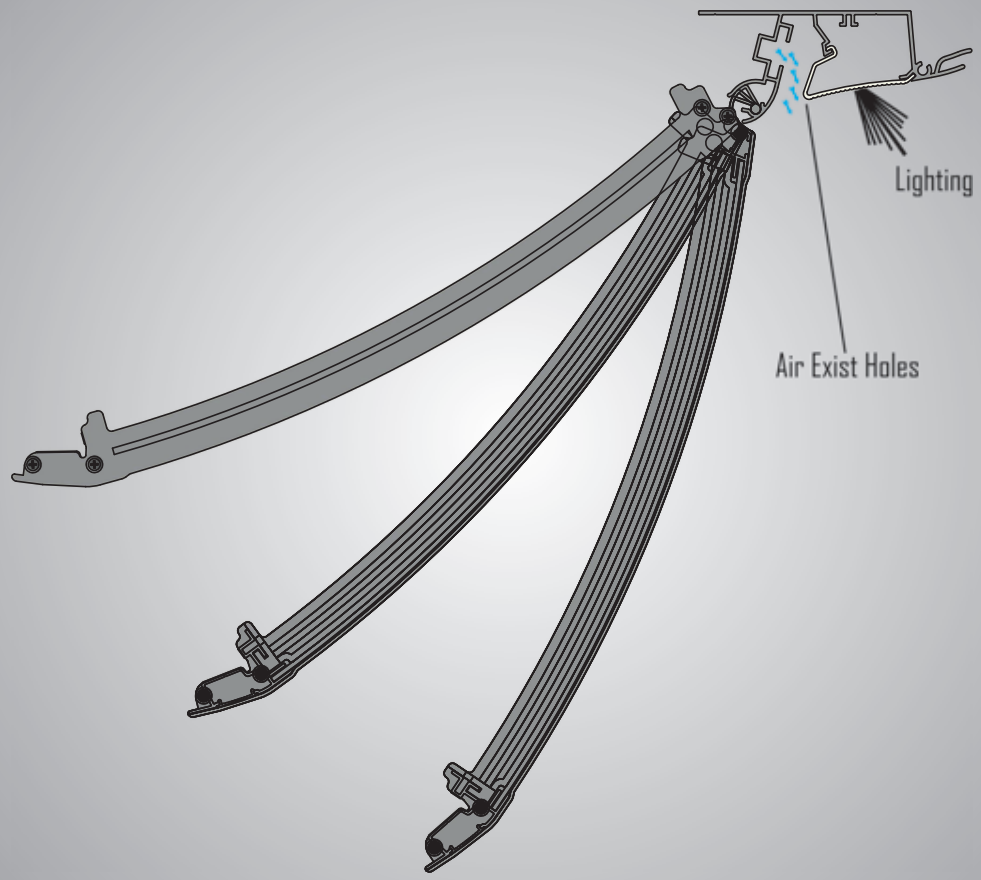

LEGO CITY CONVEX AIR CHANNEL SYSTEM

Ceiling Profile Options

AP_0024

AP_0044

AP_0174

Flap Assembly Options

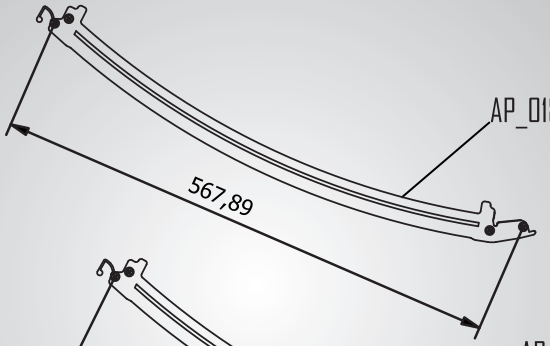

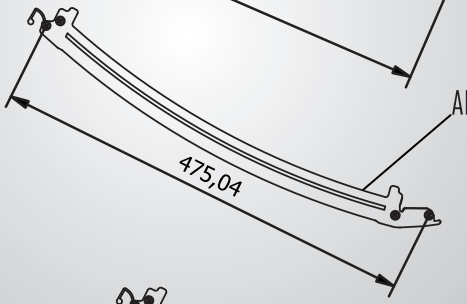

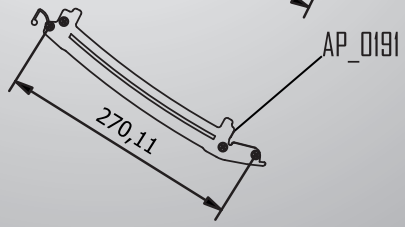

Window Profile Options

AP_0160

LEGO CITY FLAT AIR CHANNEL SYSTEM

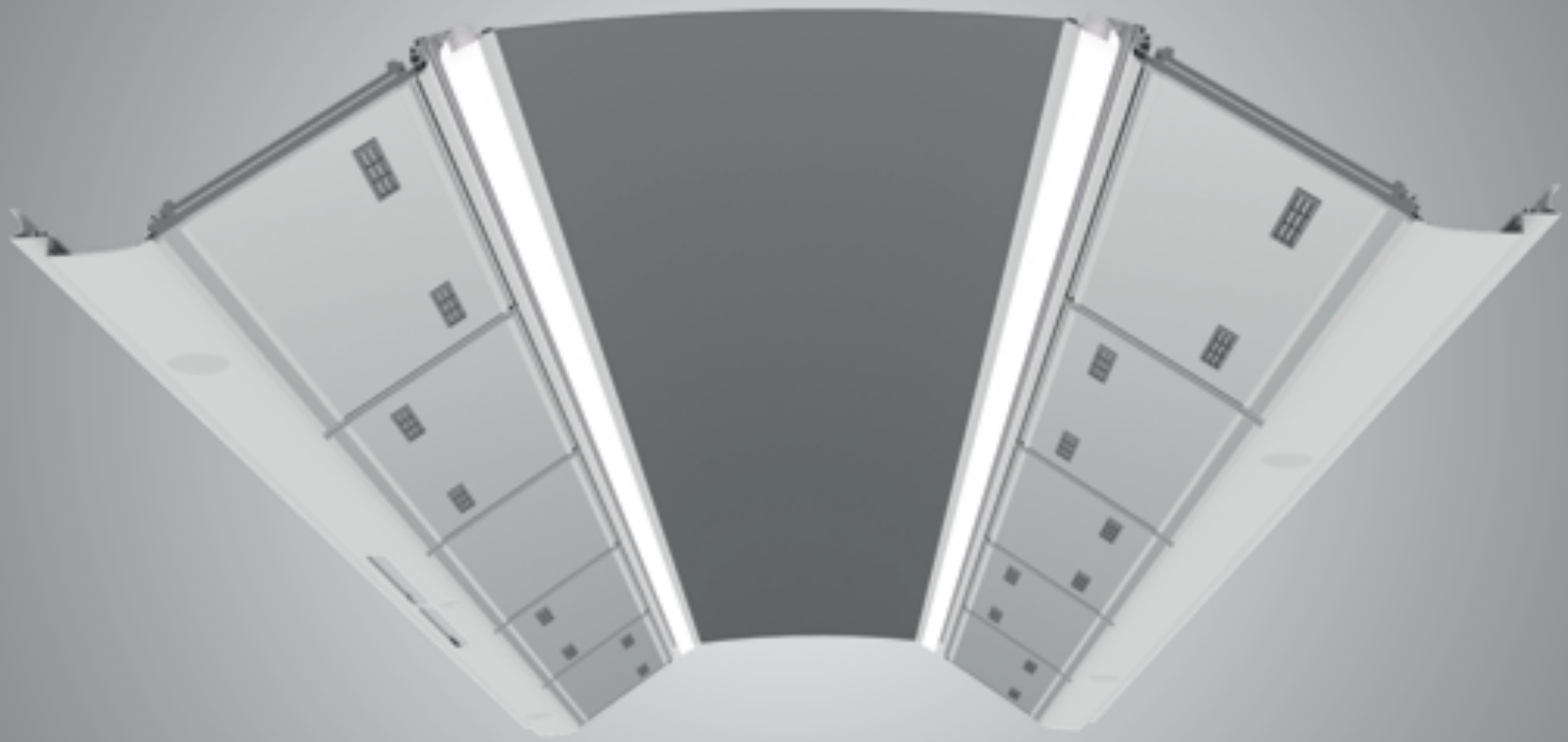

LEGO CITY FLAT AIR CHANNEL SYSTEM

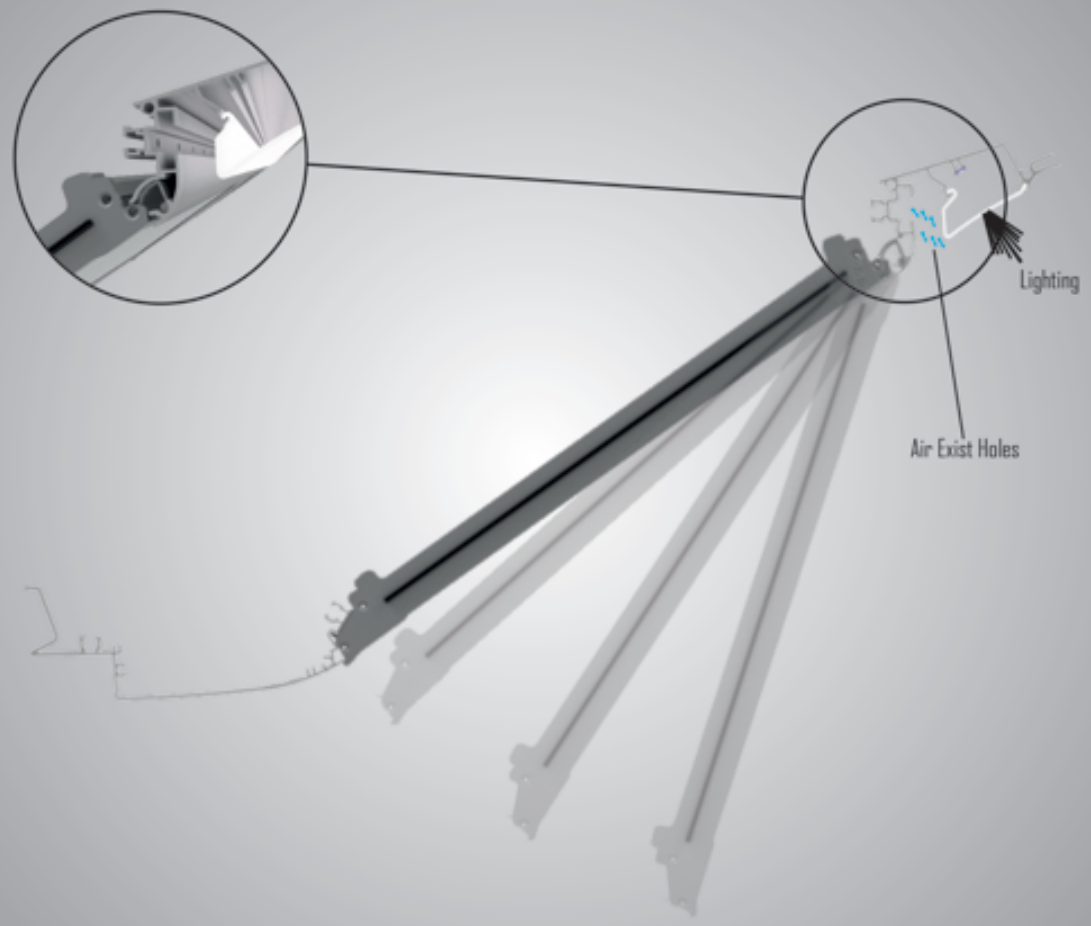

LEGO CITY FLAT AIR CHANNEL SYSTEM

Ceiling Profile Options

AP_0024

AP_0044

AP_0174

Flap Assembly Options

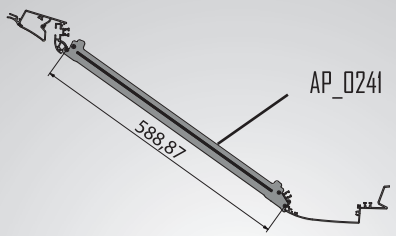

AP_0241

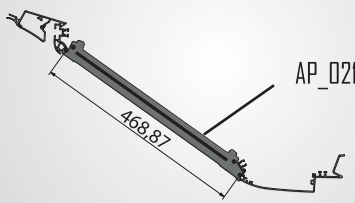

AP_0213

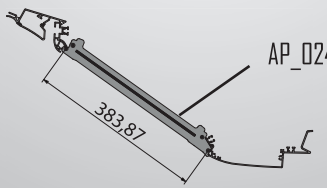

AP_0240

Window Profile Options

AP_0160

AP_0204

ME_0034

ME_0048

LEGO CITY CLOSED-LOOP AIR CHANNEL SYSTEM

LEGO CITY CLOSED-LOOP AIR CHANNEL SYSTEM

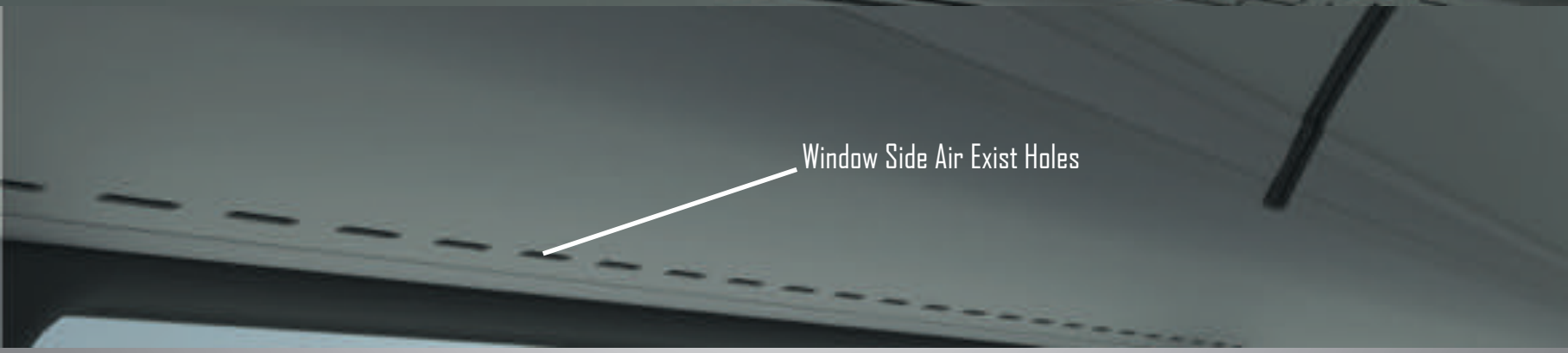

LEGO CITY CLOSED-LOOP AIR CHANNEL SYSTEM

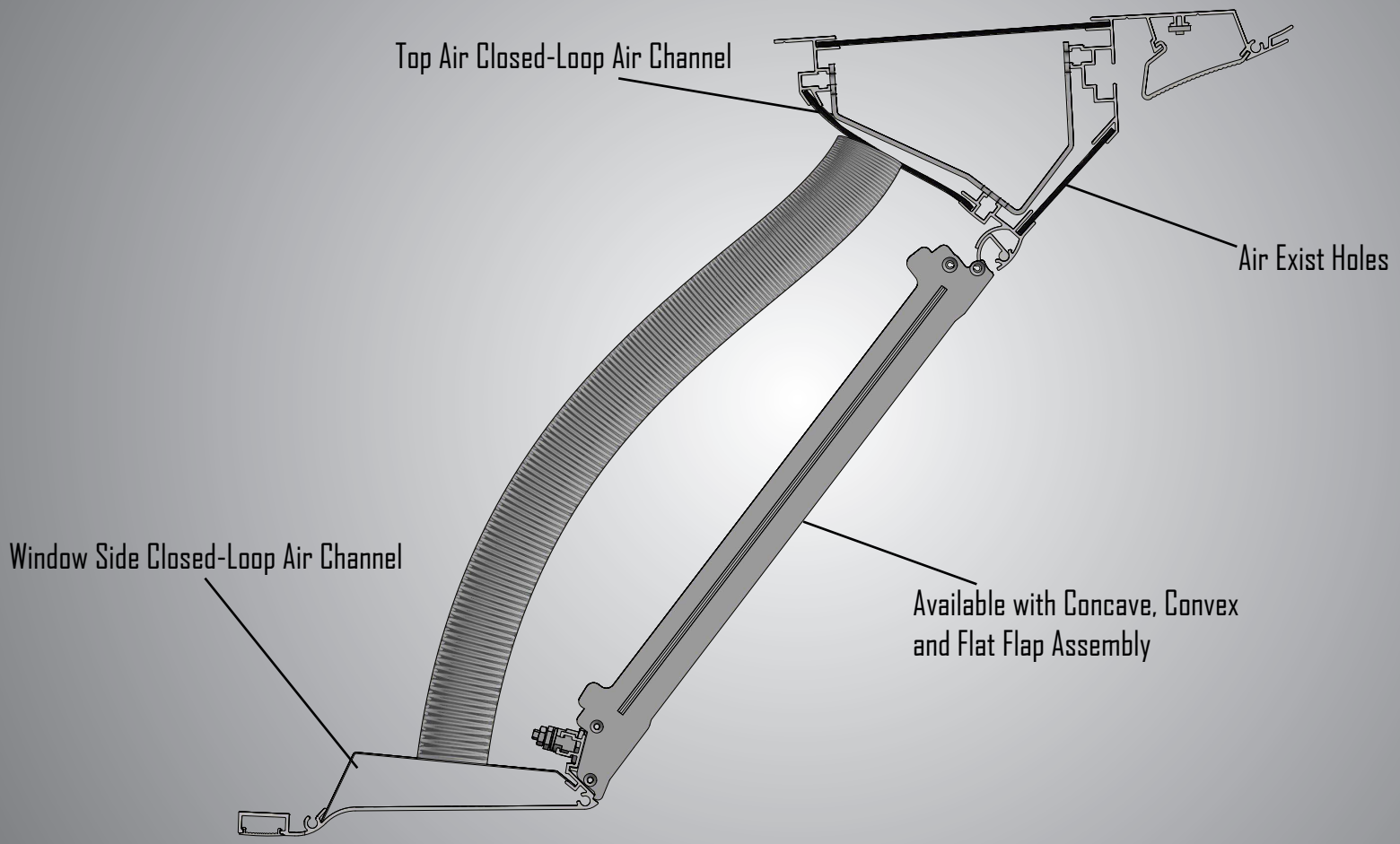

NOTES

Luggage Rack & Air Channel Systems For Minibuses

ELITE FLEXI LUX LUGGAGE RACK & AIR CHANNEL

ELITE FLEXI LUX LUGGAGE RACK & AIR CHANNEL

	Elite Flexi Lux LR & AC	Standart	Optional
1	Indirect Ceiling Lighting	•	
2	Ceiling Slim Line Lighting	•	
3	Second Ceiling Lighting (Night Light)		
4	Indirect Loading Panel Lighting		
5	Handrail Slim Line Lighting	•	
6	Handrail Lighting	•	
7	Window Side Slim Line Lighting	•	
8	Window Side Lighting Channel	•	

Any lighting position can be canceled, changed or added.

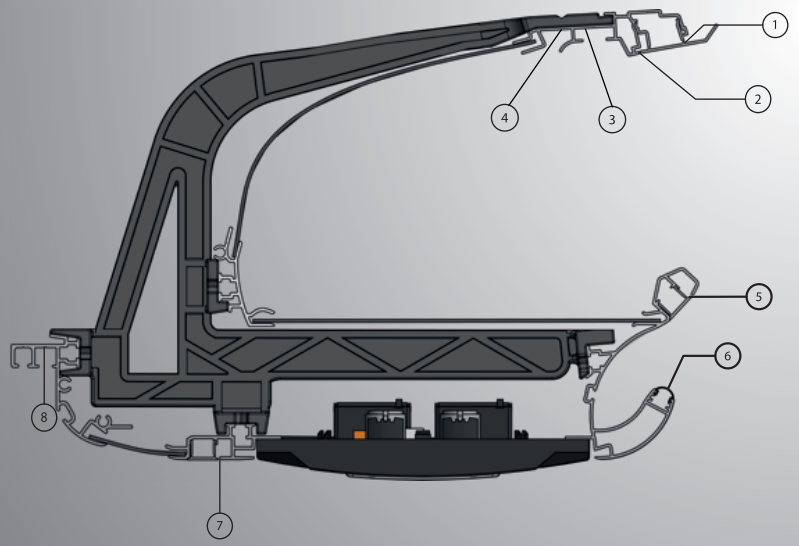

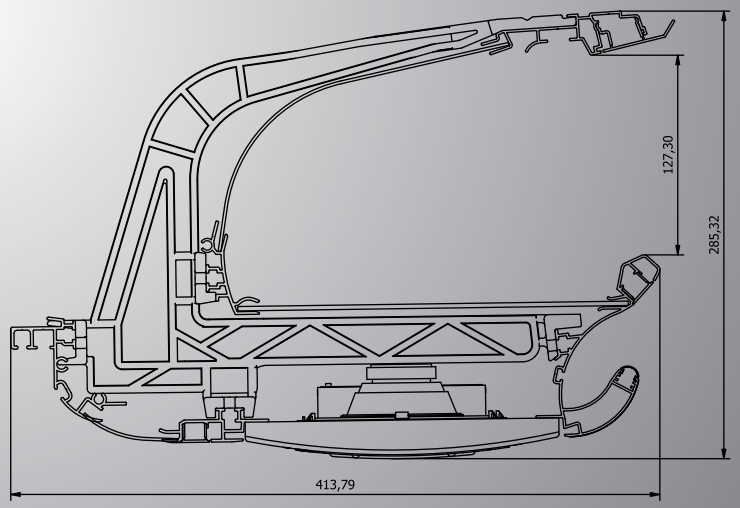

ELITE FLEXI LUX DOUBLE LINE LUGGAGE RACK & AIR CHANNEL

ELITE FLEXI LUX DOUBLE LINE LUGGAGE RACK & AIR CHANNEL

	Elite Flexi Lux Double Line LR & AC	Standart	Optional
1	Indirect Ceiling Lighting	•	
2	Ceiling Slim Line Lighting	•	
3	Second Ceiling Lighting (Night Light)		
4	Indirect Loading Panel Lighting		
5	Handrail Slim Line Lighting	•	
6	Handrail Lighting	•	
7	Corridor Side Slim Line Lighting	•	
8	Window Side Slim Line Lighting	•	
9	Window Side Lighting Channel	•	

Any lighting position can be canceled, changed or added.

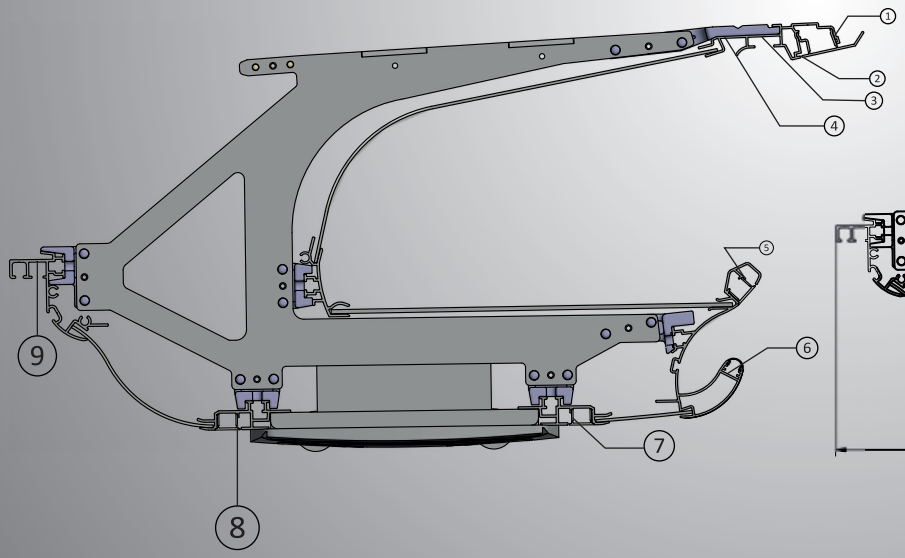

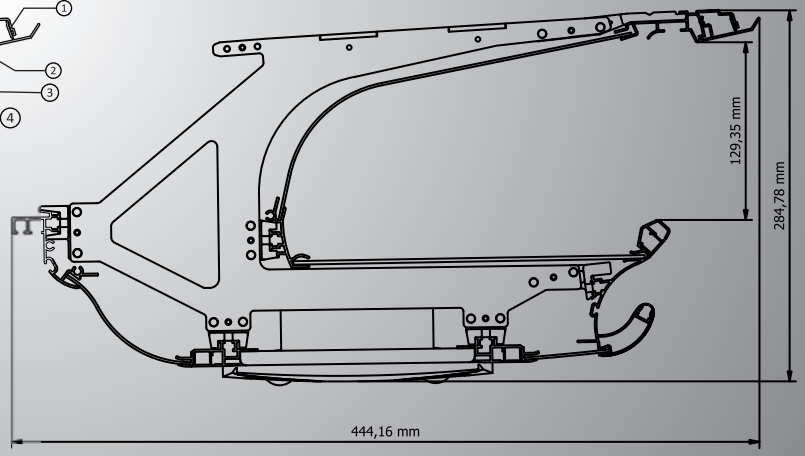

FLEXI LUX LUGGAGE RACK & AIR CHANNEL

FLEXI LUX LUGGAGE RACK & AIR CHANNEL

	Flexi Lux LR & AC	Standart	Optional
1	Indirect Ceiling Lighting	•	
2	Ceiling Slim Line Lighting	•	
3	Second Ceiling Lighting (Night Light)		
4	Indirect Loading Panel Lighting		
5	Handrail Lighting	•	
6	Window Side Lighting Channel	•	

Any lighting position can be canceled, changed or added.

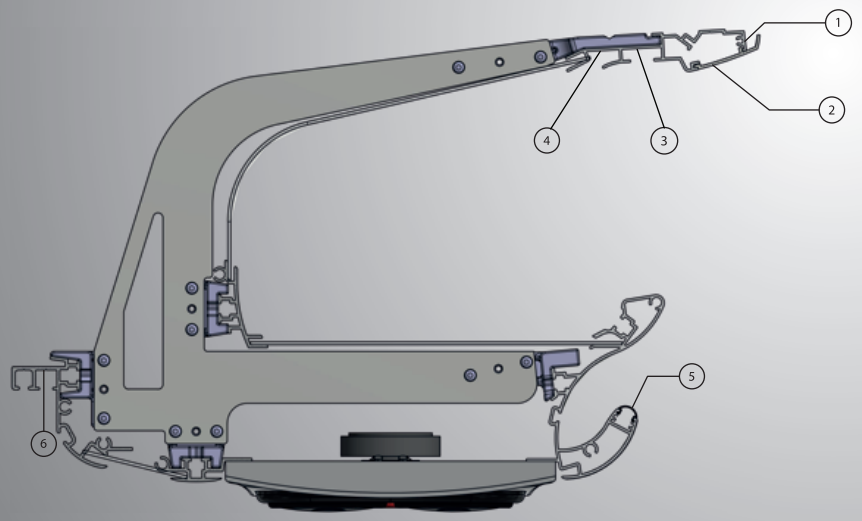

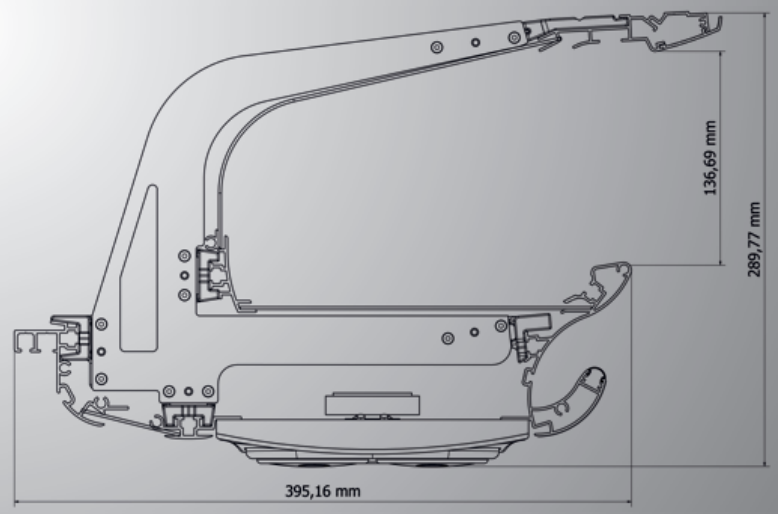

Product Code: 007_01

FLEXI LUX DOUBLE LINE LUGGAGE RACK & AIR CHANNEL

FLEXI LUX DOUBLE LINE LUGGAGE RACK & AIR CHANNEL

	Flexi Lux Double Line LR & AC	Standart	Optional
1	Indirect Ceiling Lighting	•	
2	Ceiling Lighting	•	
3	Second Ceiling Lighting (Night Light)		
4	Indirect Loading Panel Lighting		
5	Handrail Lighting	•	
6	Corridor Side Slim Line Lighting	•	
7	Window Side Slim Line Lighting	•	
8	Window Side Lighting Channel	•	

Any lighting position can be canceled, changed or added.

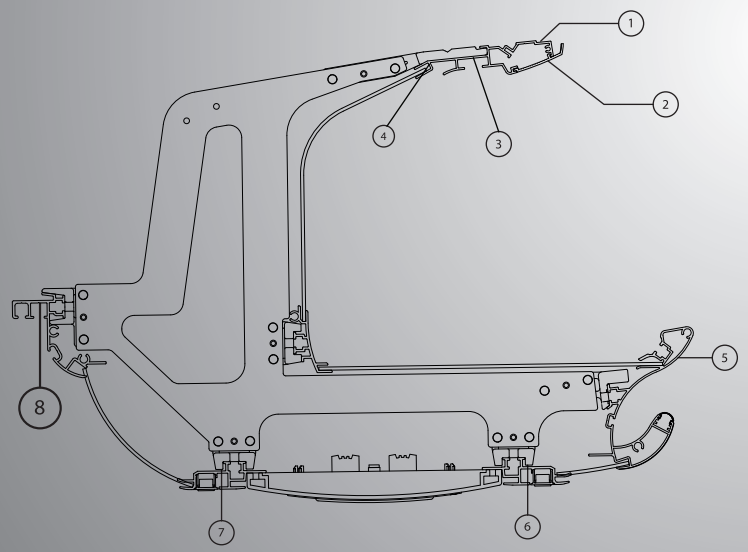

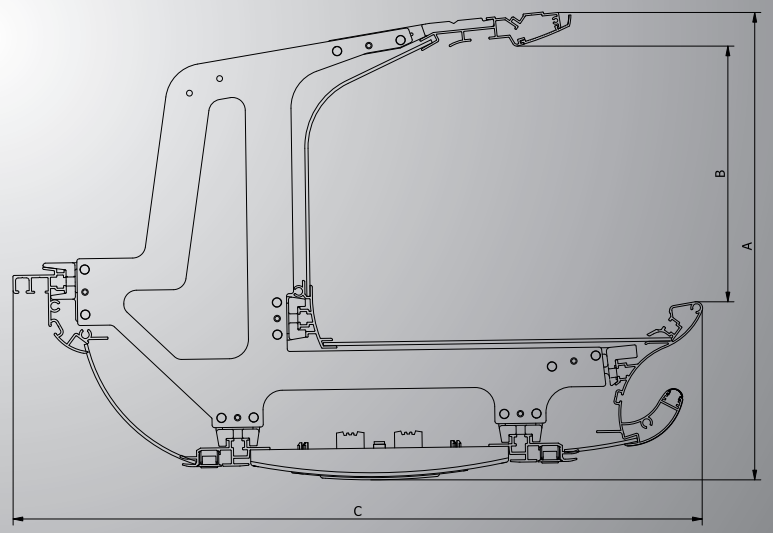

CLASSY LUGGAGE RACK & AIR CHANNEL WITH HANDRAIL

CLASSY LUGGAGE RACK & AIR CHANNEL WITH HANDRAIL

Classy LR & AC With Hanrail	Standart	Optional
1 Indirect Ceiling Lighting		
2 Ceiling Lighting	•	
3 Bracket Lighting	•	
4 Handrail Lighting	•	
5 Indirect Loading Panel Lighting		

Any lighting position can be canceled, changed or added.

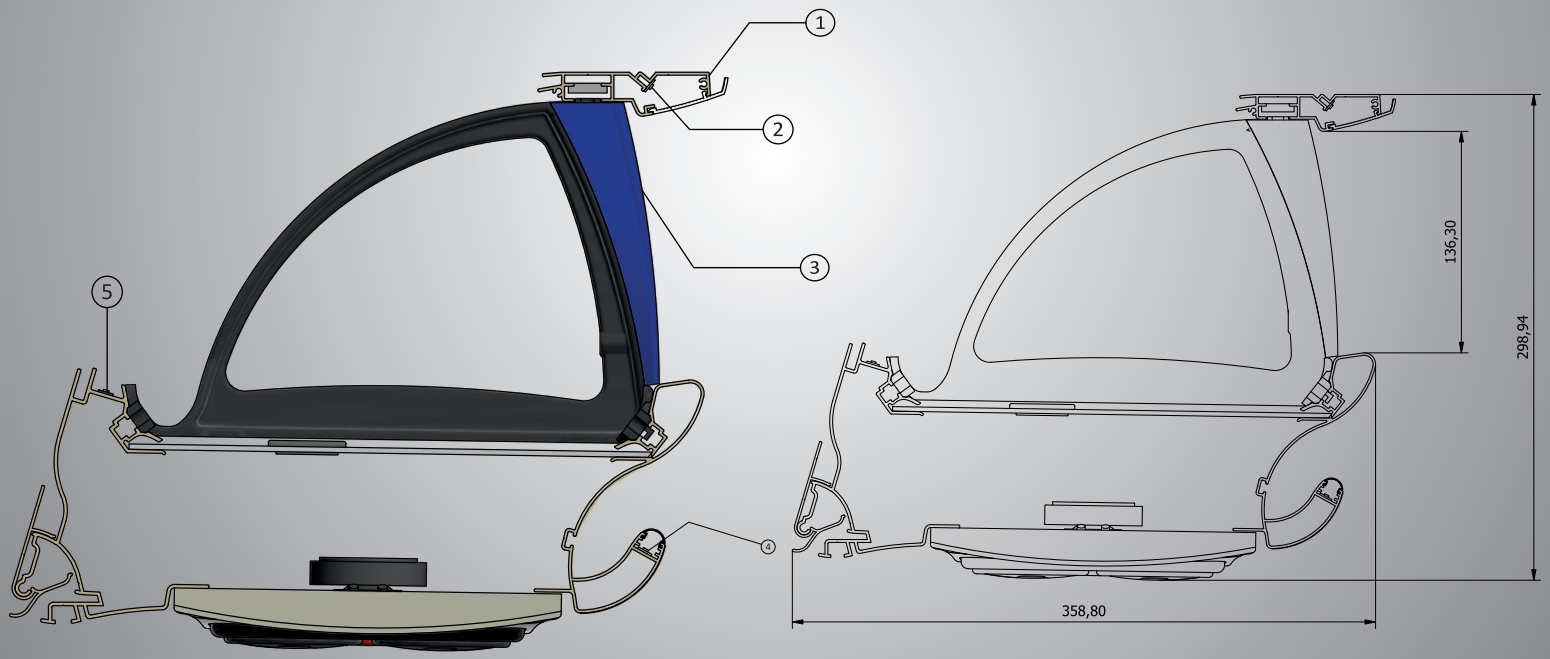

CLASSY LUGGAGE RACK & AIR CHANNEL WITHOUT HANDRAIL

CLASSY LUGGAGE RACK & AIR CHANNEL WITHOUT HANDRAIL

Classy LR & AC Without Hanrail	Standart	Optional
1 Indirect Ceiling Lighting		
2 Ceiling Lighting	•	
3 Bracket Lighting	•	
4 Corridor Side Lighting	•	
5 Indirect Loading Panel Lighting		

Any lighting position can be canceled, changed or added.

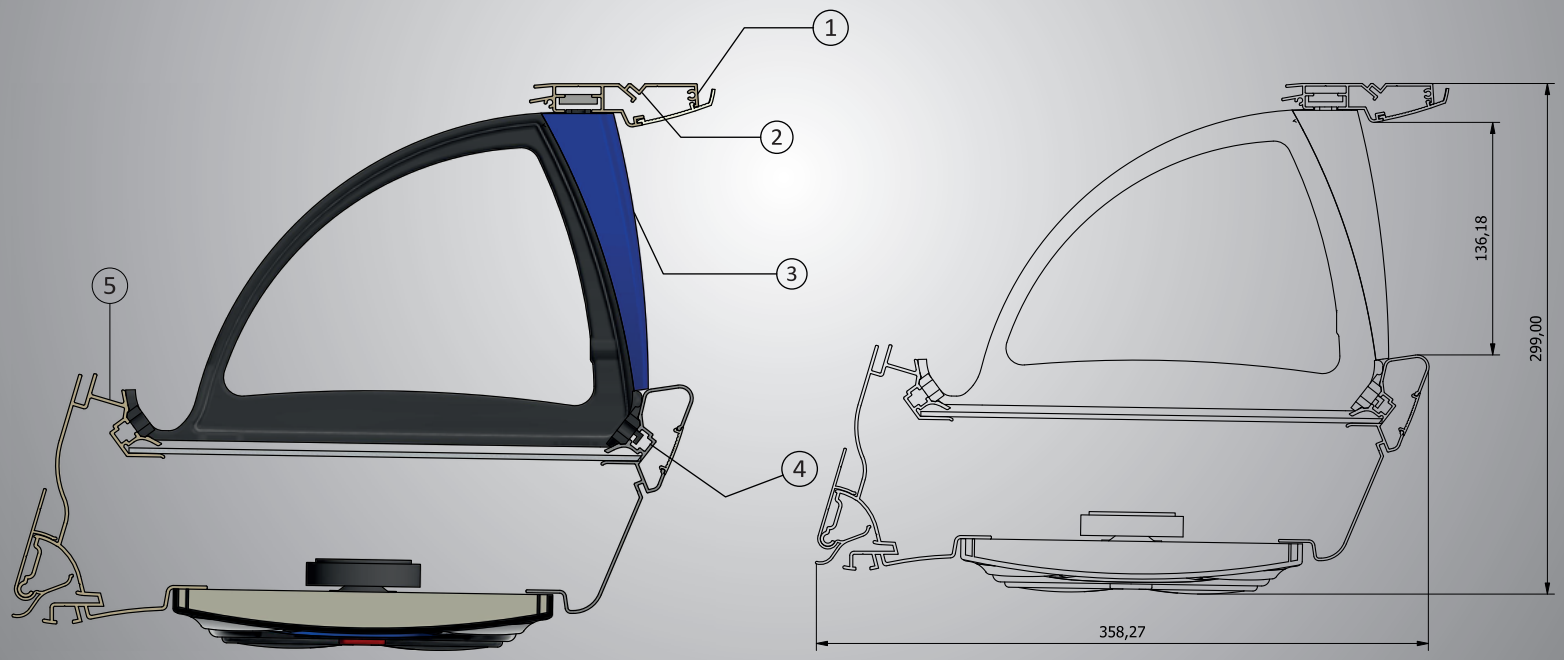

HARMONY LUGGAGE RACK & AIR CHANNEL

HARMONY LUGGAGE RACK & AIR CHANNEL

Harmony LR & AC	Standart	Optional
1 Indirect Ceiling Lighting	•	
2 Ceiling Lighting	•	
3 Bracket Lighting	•	
4 Upper Handrail Lighting	•	
5 Below Handrail Lighting		
6 Indirect Loading Panel Lighting		

Any lighting position can be canceled, changed or added.

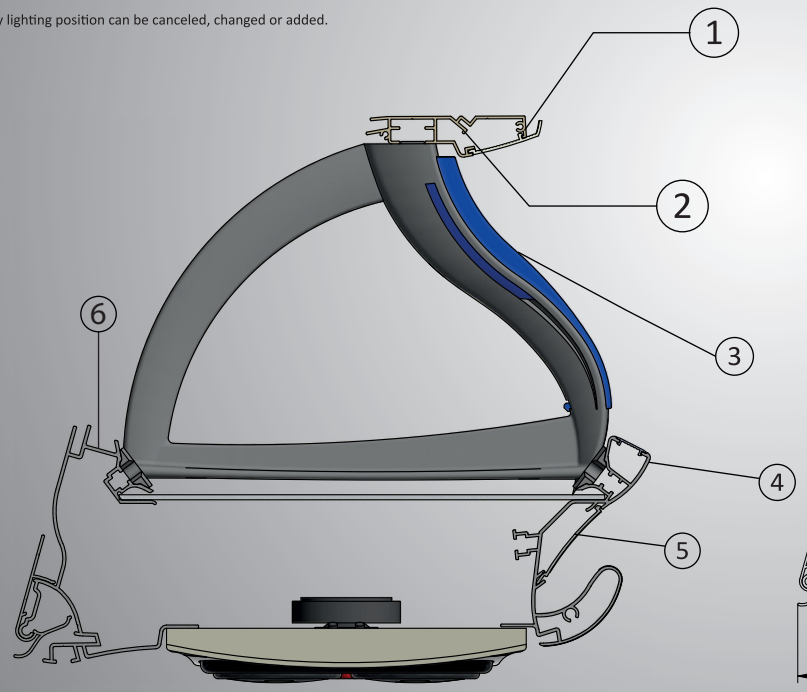

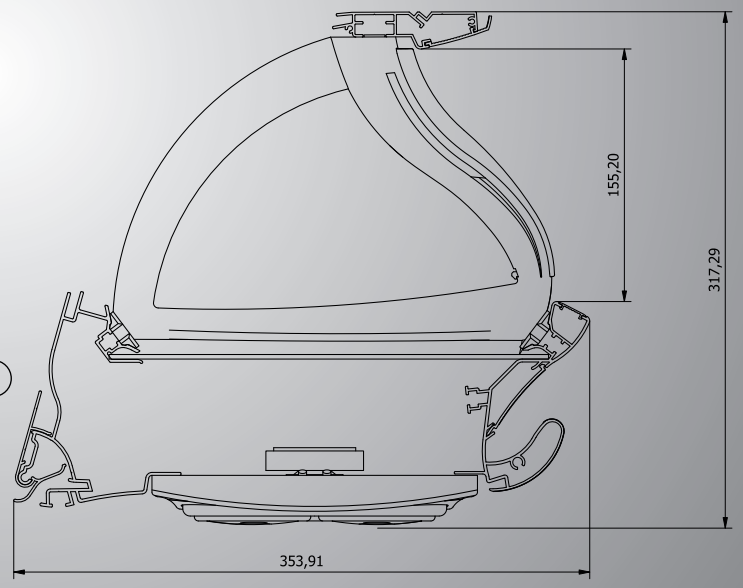

ZENITH LUGGAGE RACK & AIR CHANNEL

ZENITH LUGGAGE RACK & AIR CHANNEL

Zenith LR & AC	Standart	Optional
1 Indirect Ceiling Lighting	•	
2 Ceiling Lighting	•	
3 Bracket Lighting	•	
4 Handrail Lighting	•	
5 Corridor Side Slim Line Lighting	•	
6 Window Side Slim Line Lighting	•	
7 Indirect Loading Panel Lighting		

Any lighting position can be canceled, changed or added.

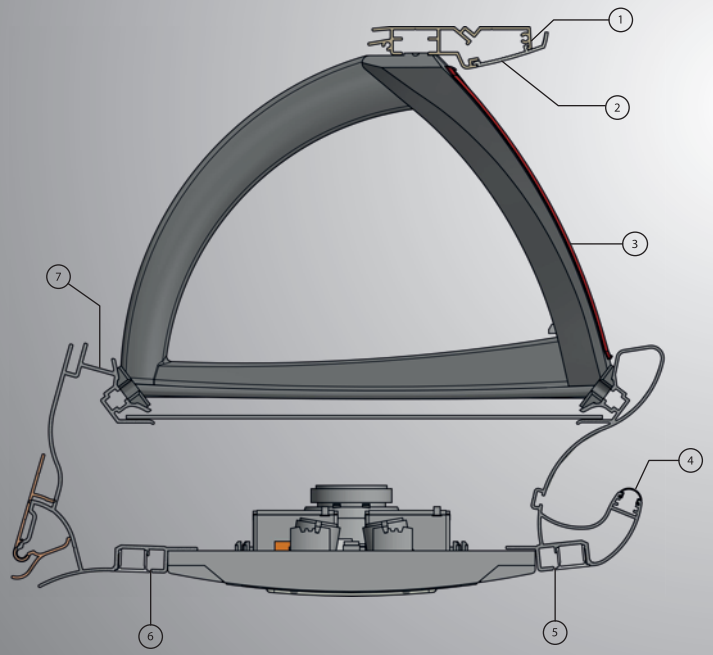

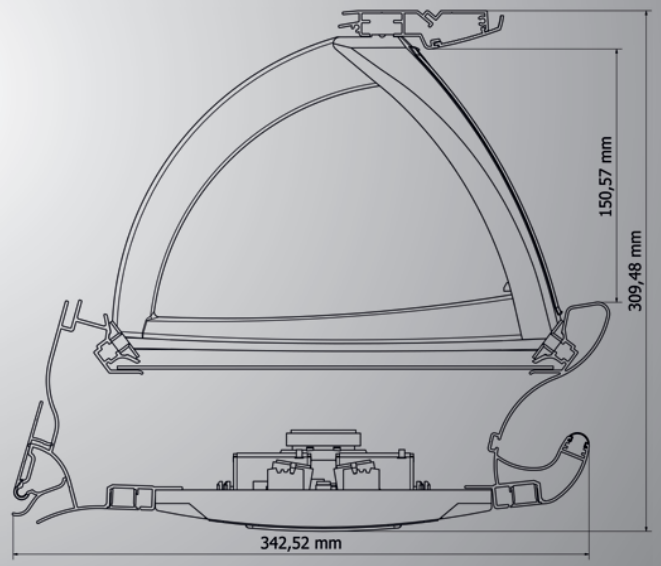

LONG ZENITH LUGGAGE RACK & AIR CHANNEL

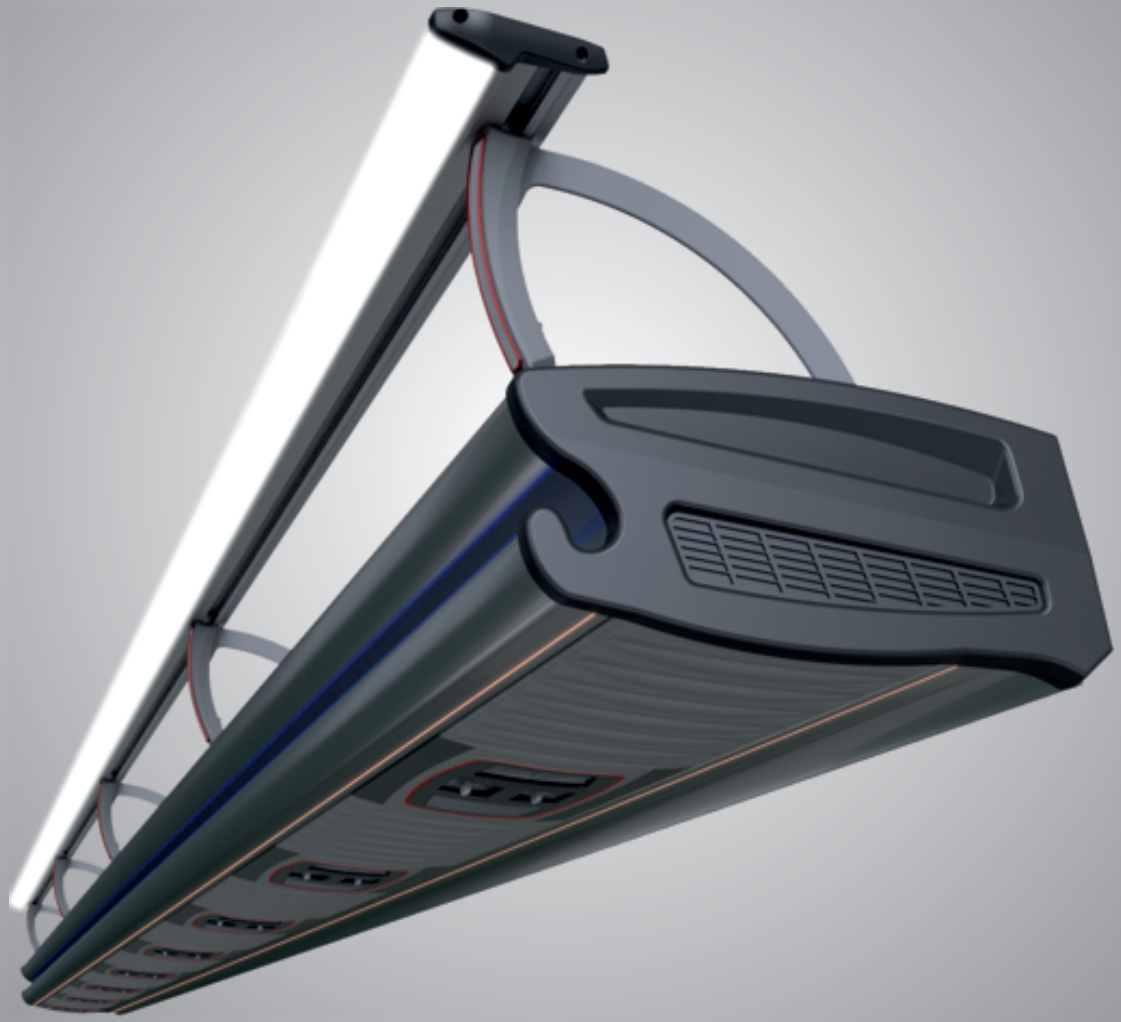

LONG ZENITH LUGGAGE RACK & AIR CHANNEL

	Long Zenith LR & AC	Standart	Optional
1	Indirect Ceiling Lighting	•	
2	Ceiling Lighting	•	
3	Bracket Lighting	•	
4	Handrail Lighting	•	
5	Corridor Side Slim Line Lighting	•	
6	Window Side Slim Line Lighting	•	
7	Indirect Loading Panel Lighting		

Any lighting position can be canceled, changed or added.

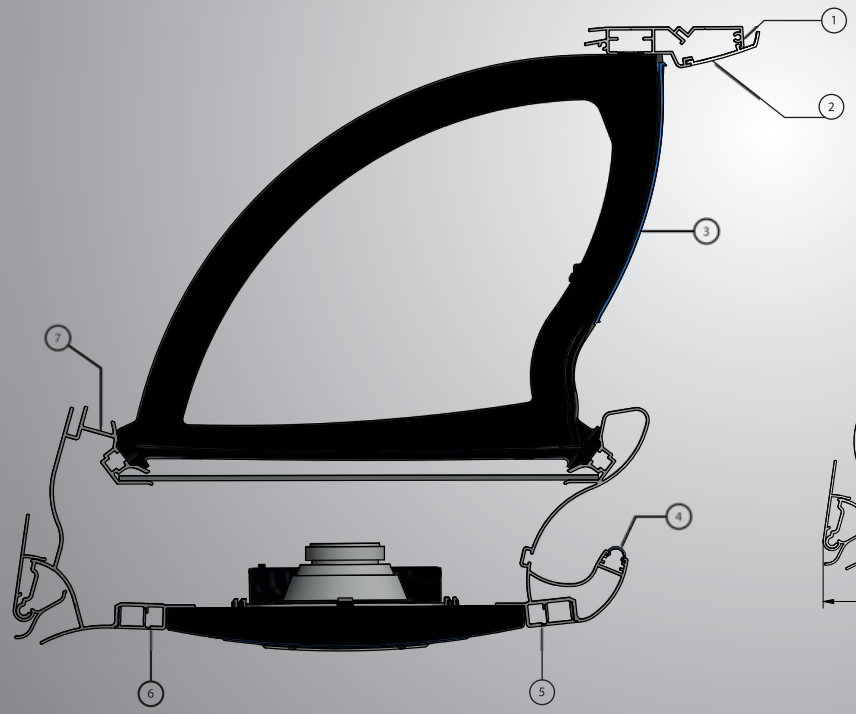

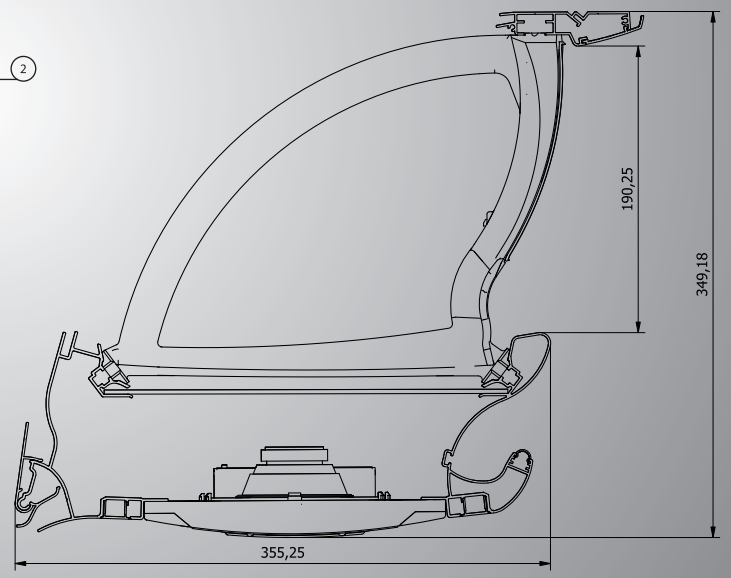

Product Code: 014_02

WIDE ZENITH LUGGAGE RACK & AIR CHANNEL

WIDE ZENITH LUGGAGE RACK & AIR CHANNEL

	Wide Zenith LR & AC	Standart	Optional
1	Indirect Ceiling Lighting		
2	Ceiling Lighting	•	
3	Bracket Lighting	•	
4	Handrail Lighting	•	
5	Corridor Side Slim Line Lighting	•	
6	Window Side Slim Line Lighting	•	
7	Indirect Loading Panel Lighting		

Any lighting position can be canceled, changed or added.

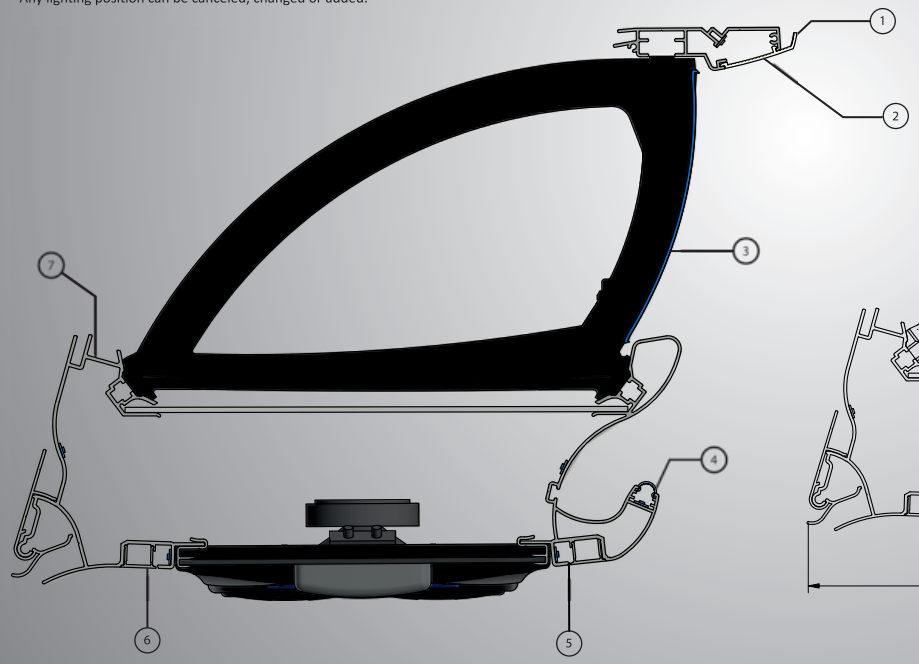

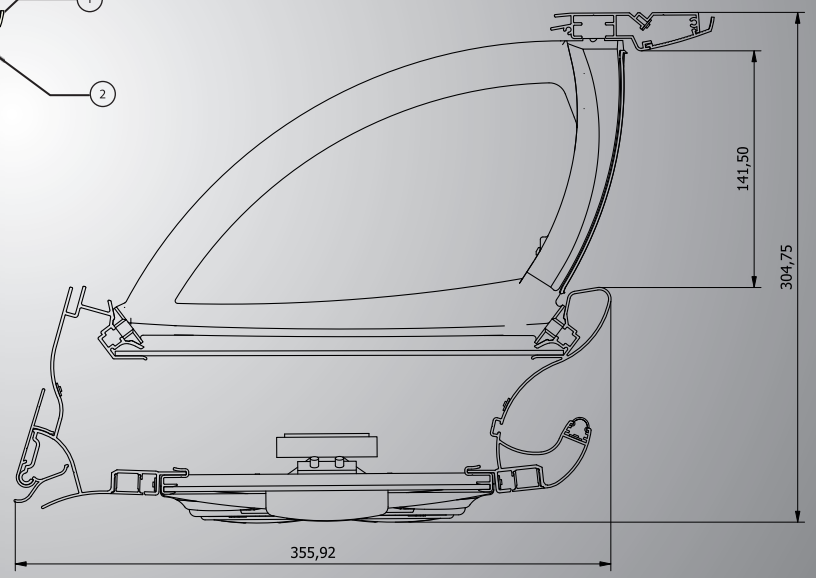

COMBO LUGGAGE RACK & AIR CHANNEL

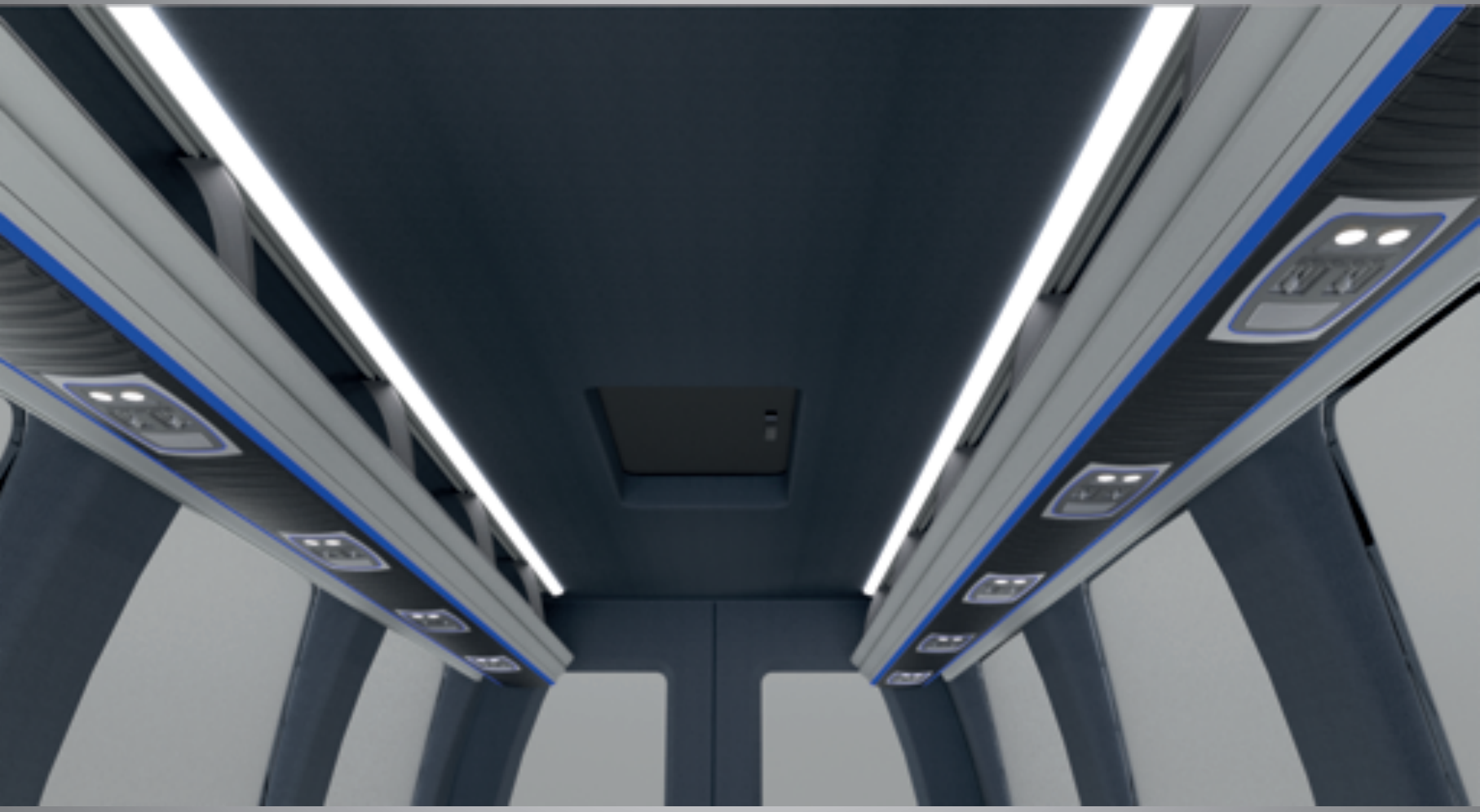

COMBO LUGGAGE RACK & AIR CHANNEL

Combo LR & AC	Standart	Optional
1 Indirect Ceiling Lighting	•	
2 Ceiling Lighting	•	
3 Handrail Lighting	•	
4 Corridor Side Slim Line Lighting	•	
5 Corridor Side Straight Lighting	•	
6 Window Side Straight Lighting	•	
7 Window Side Slim Line Lighting		
8 Window Side Lighting Channel	•	
9 Indirect Loading Panel Lighting		

Any lighting position can be canceled, changed or added.

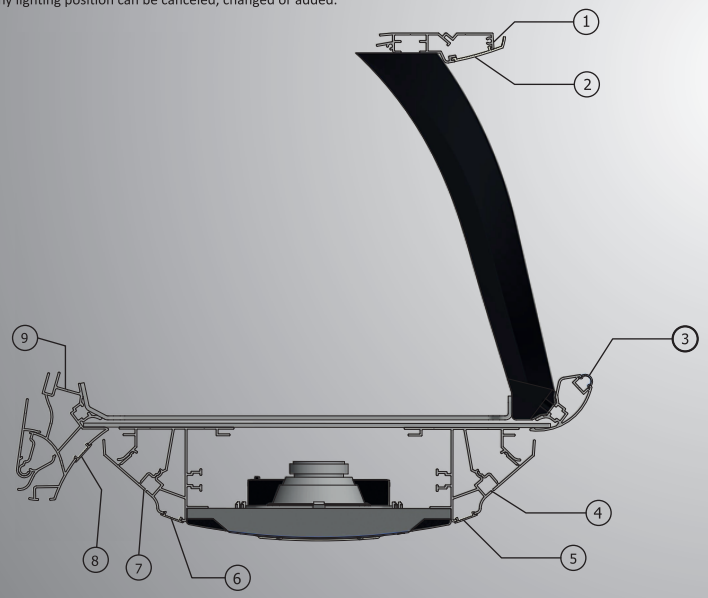

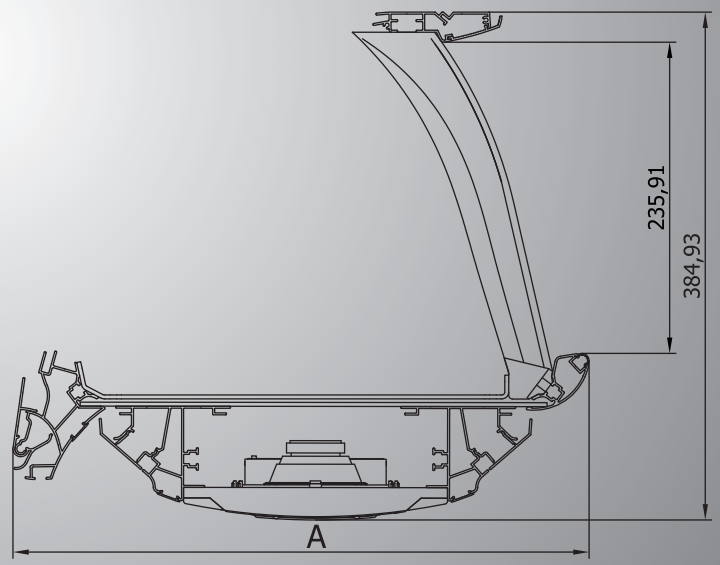

CURVY LUGGAGE RACK & AIR CHANNEL

CURVY LUGGAGE RACK & AIR CHANNEL

	Curvy LR & AC	Standart	Optional
1	Corridor Side Indirect Ceiling Lighting	•	
2	Corridor Side Ceiling Lighting	•	
3	Bracket Lighting	•	
4	Corridor Side Handrail Lighting	•	
5	Window Side Handrail Lighting	•	
6	Window Side Ceiling Lighting	•	
7	Window Side Indirect Ceiling Lighting		

Any lighting position can be canceled, changed or added.

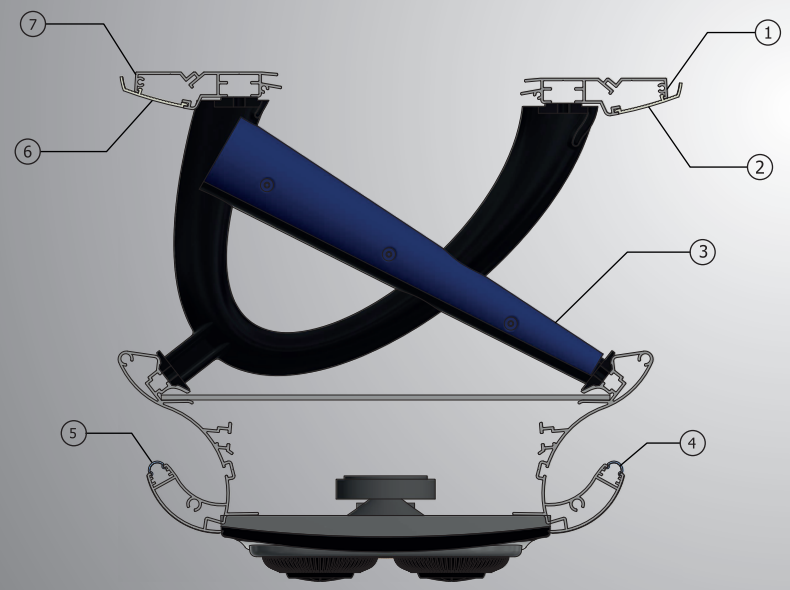

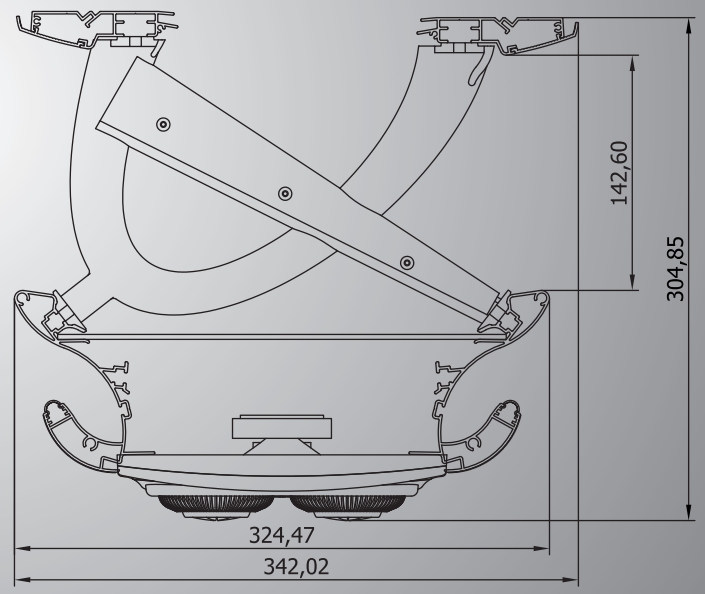

ENIGMA LUGGAGE RACK & AIR CHANNEL

ENIGMA LUGGAGE RACK & AIR CHANNEL

	Enigma LR & AC	Standart	Optional
1	Indirect Ceiling Lighting	•	
2	Ceiling Lighting	•	
3	Second Ceiling Lighting (Night Light)	•	
4	Indirect Loading Panel Lighting	•	
5	Inner Handrail Lighting	•	
6	Main Handrail Lighting	•	
7	Handrail Lighting		
8	Corridor Side Slim Line Lighting	•	
9	Window Side Slim Line Lighting		

Any lighting position can be canceled, changed or added.

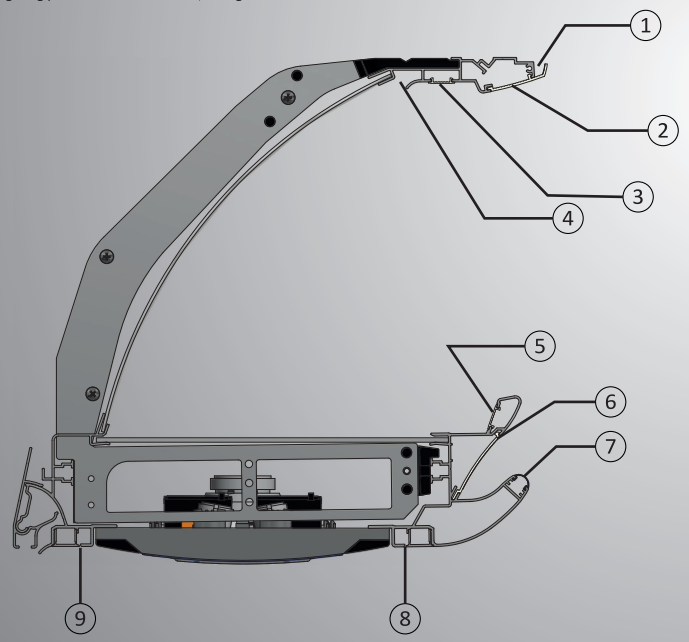

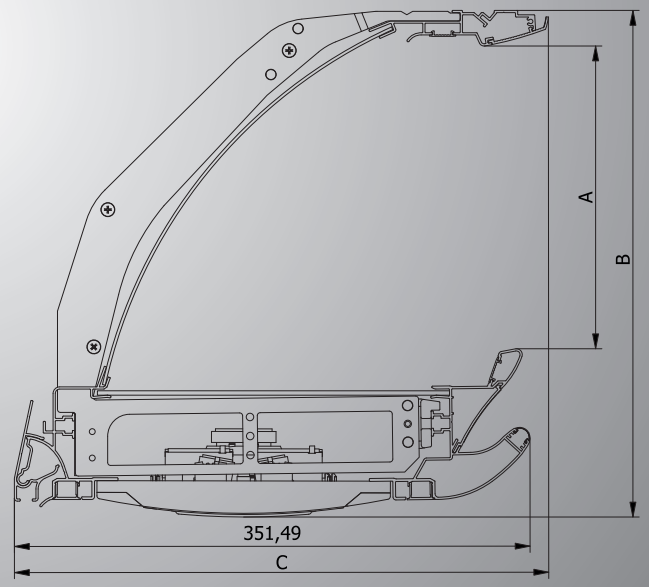

SMART LUGGAGE RACK & AIR CHANNEL

SMART LUGGAGE RACK & AIR CHANNEL

SMART LR & AC	Standart	Optional
1 Corridor Side Lighting Channel	•	
2 Window Side Lighting Channel	•	

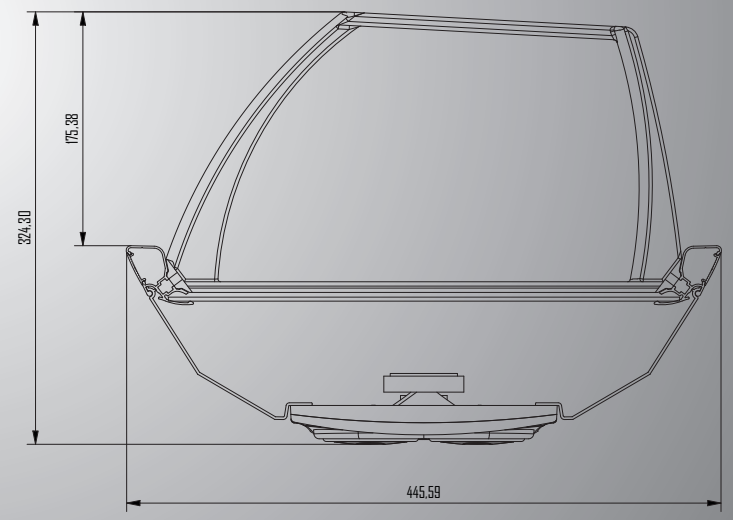

NOTES

Air Channel Systems For Minibuses

SLIM LIGHTED AIR CHANNEL ONLY

SLIM LIGHTED AIR CHANNEL ONLY

	Slim Lighted Air Channel Only	Standart	Optional
1	Corridor Side Indirect Ceiling Lighting	•	
2	Corridor Side Slim Line Lighting	•	
3	Corridor Side Lighting Channel		
4	Window Side Lighting Channel		
5	Window Side Slim Line Lighting	•	
6	Window Side Indirect Ceiling Lighting	•	

Any lighting position can be canceled, changed or added.

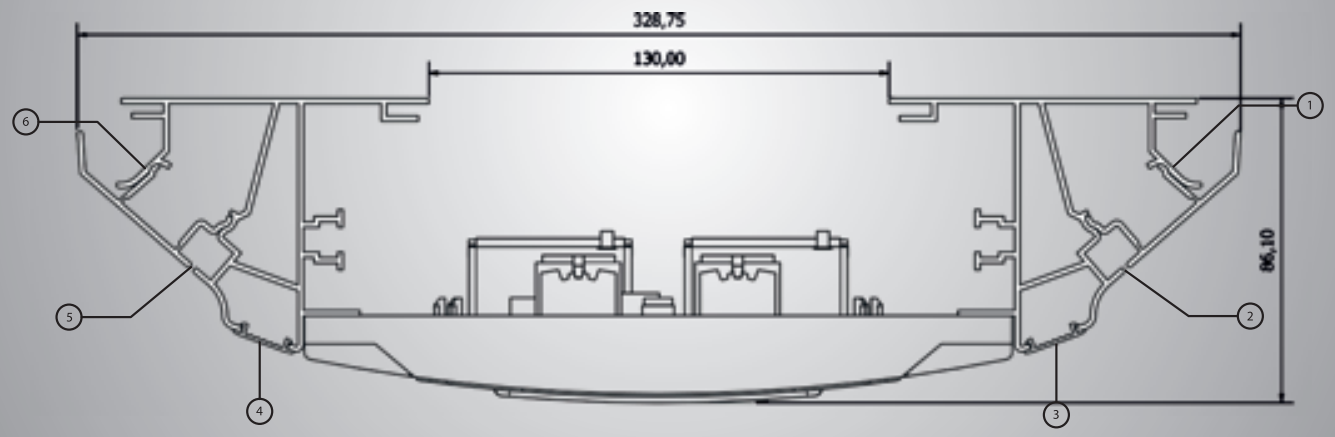

PRETTY AIR CHANNEL ONLY

PRETTY AIR CHANNEL ONLY

Pretty Air Channel Only	Standart	Optional
1 Indirect Ceiling Lighting	•	
2 Ceiling Lighting	•	
3 Second Ceiling Lighting (Night Light)		
4 Second Indirect Ceiling Lighting		
5 Slim Line Lighting	•	
6 Window Side Lighting Channel	•	

Any lighting position can be canceled, changed or added.

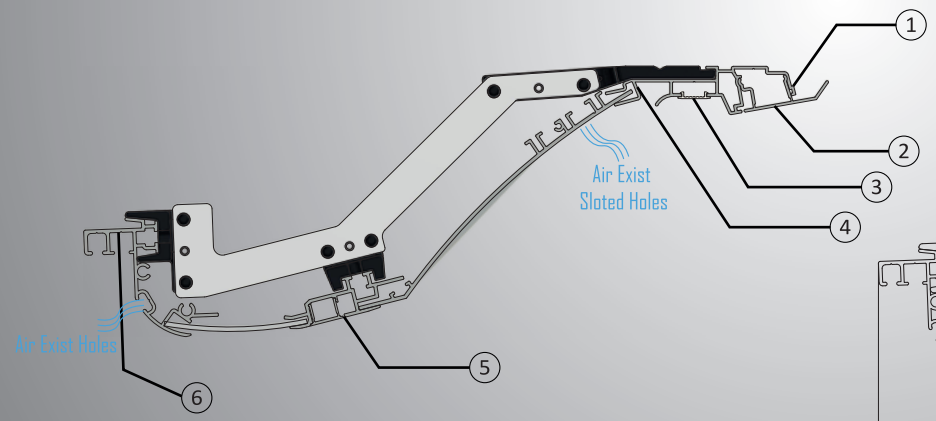

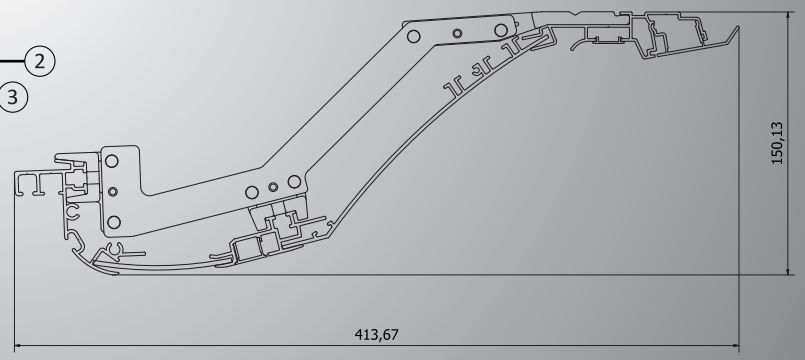

PRETTY V2 AIR CHANNEL ONLY

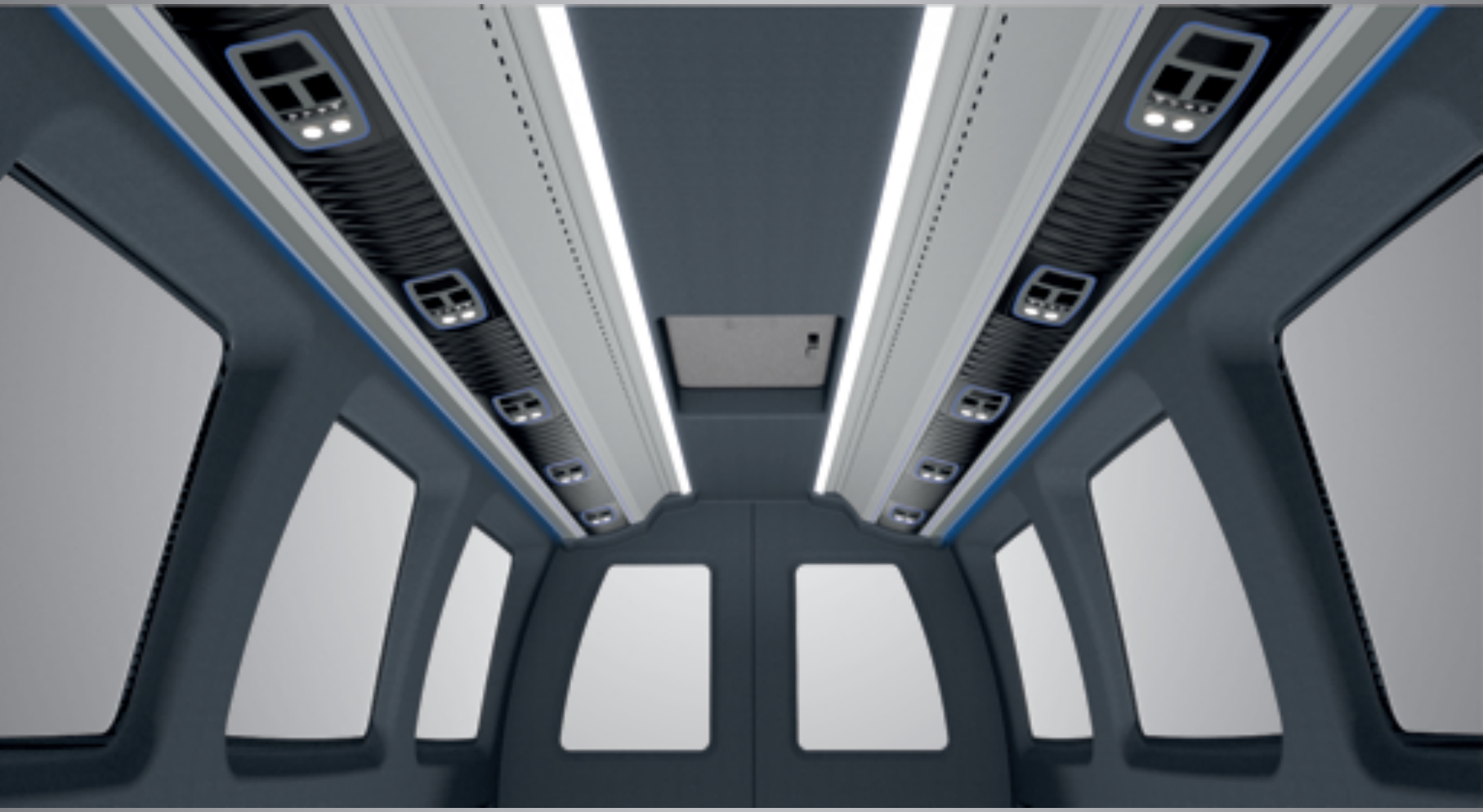

PRETTY V2 AIR CHANNEL ONLY

Pretty V2 Air Channel Only	Standart	Optional
1 Indirect Ceiling Lighting	•	
2 Ceiling Lighting	•	
3 Second Ceiling Lighting (Night Light)		
4 Second Indirect Ceiling Lighting		
5 Corridor Side Slim Line Lighting	•	
6 Window Side Slim Line Lighting	•	
7 Window Side Lighting Channel	•	

Any lighting position can be canceled, changed or added.

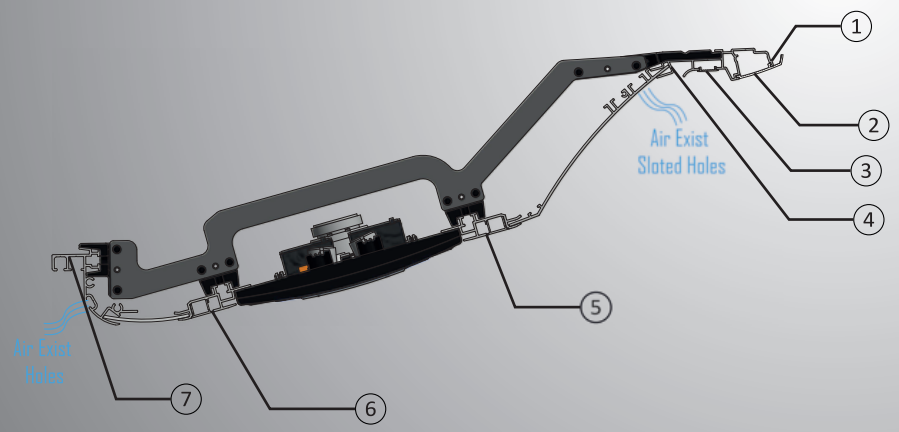

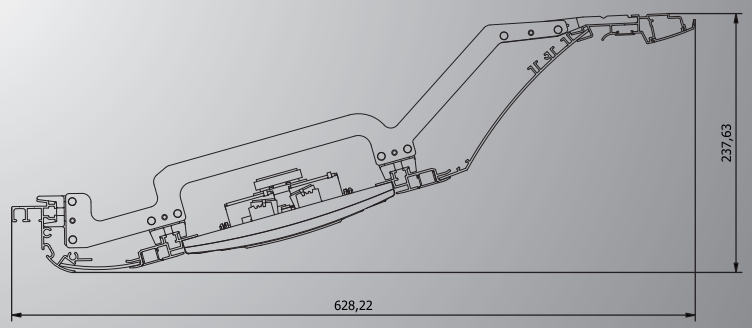

INTEGRAL AIR CHANNEL ONLY

INTEGRAL AIR CHANNEL ONLY

Integral Air Channel Only	Standart	Optional
1 Indirect Ceiling Lighting	•	
2 Corridor Side Slim Line Lighting		
3 Corridor Side Lighting	•	
4 Window Side Lighting	•	

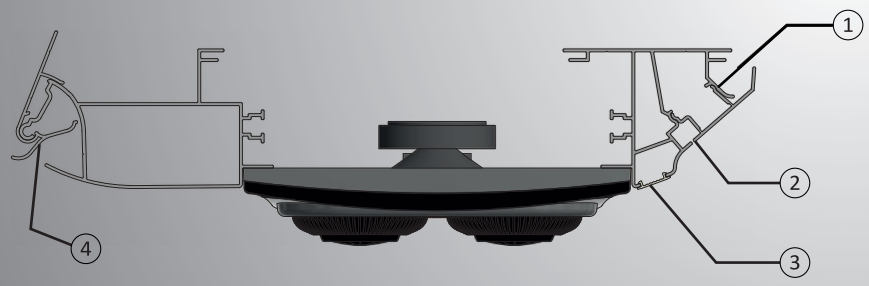

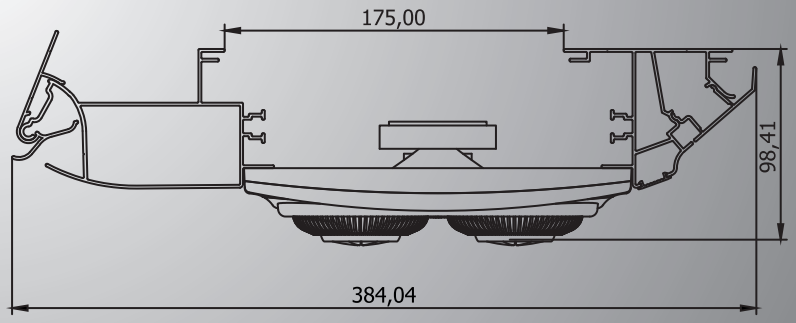

BALANCE AIR CHANNEL ONLY

BALANCE AIR CHANNEL ONLY

BALANCE AC ONLY	Standart	Optional
1 Corridor Side Lighting Channel	•	
2 Window Side Lighting Channel	•	

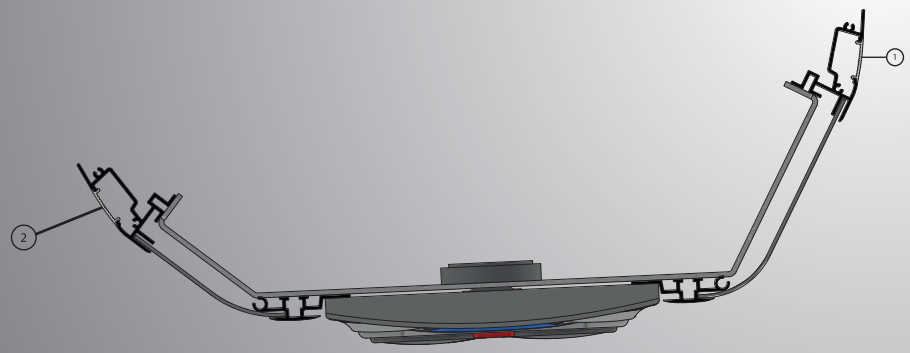

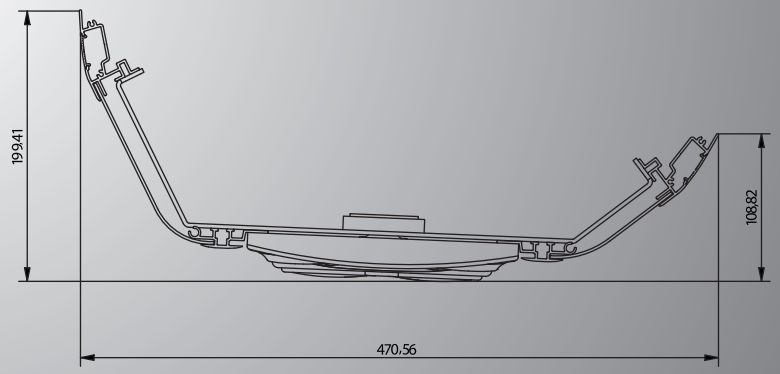

NOTES

Luggage Rack Systems For Minibuses

Product Code: 022_03

ZENITH LUGGAGE RACK ONLY DOUBLE LINE

ZENITH LUGGAGE RACK ONLY DOUBLE LINE

	Zenith Luggage Rack Only Double Line	Standart	Optional
1	Indirect Ceiling Lighting	•	
2	Ceiling Lighting	•	
3	Bracket Ligting		
4	Handrail Slim Line Lighting	•	
5	Corridor Side Lighting Channel (Or Cascade Reading Lights)	•	
6	Window Side Lighting Channel (Or Cascade Reading Lights)	•	
7	Indirect Loading Panel Lighting		

Any lighting position can be canceled, changed or added.

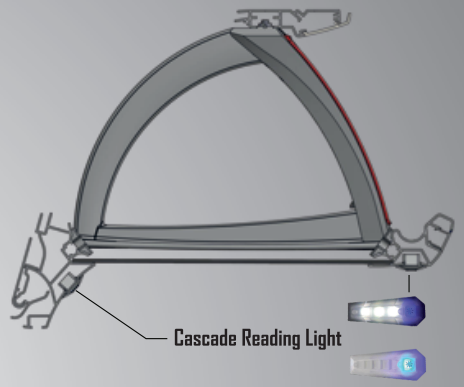

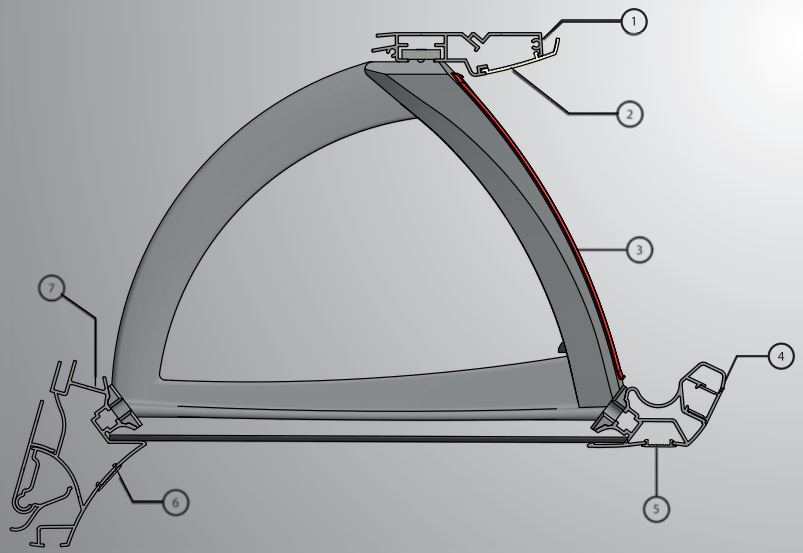

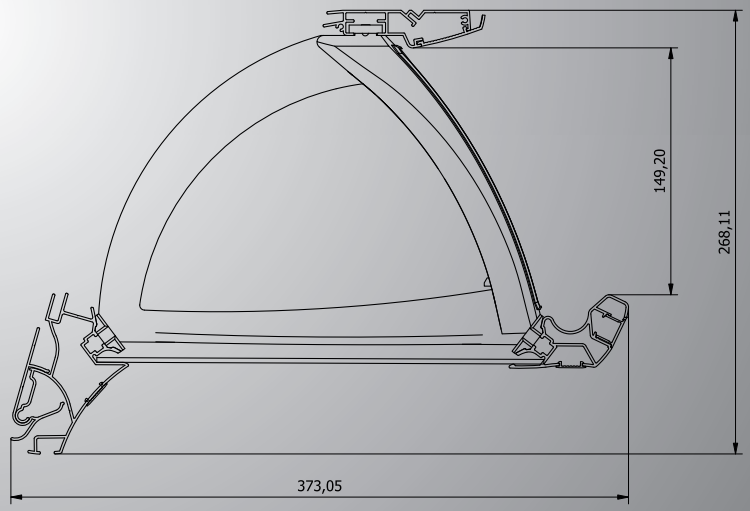

WIDE ZENITH LUGGAGE RACK ONLY DOUBLE LINE

WIDE ZENITH LUGGAGE RACK ONLY DOUBLE LINE

	Wide Zenith Luggage Rack Only Double Line	Standart	Optional
1	Indirect Ceiling Lighting		
2	Ceiling Lighting	•	
3	Bracket Ligting		
4	Handrail Slim Line Lighting	•	
5	Corridor Side Lighting Channel (Or Cascade Reading Lights)	•	
6	Window Side Lighting Channel (Or Cascade Reading Lights)	•	
7	Indirect Loading Panel Lighting		

Any lighting position can be canceled, changed or added.

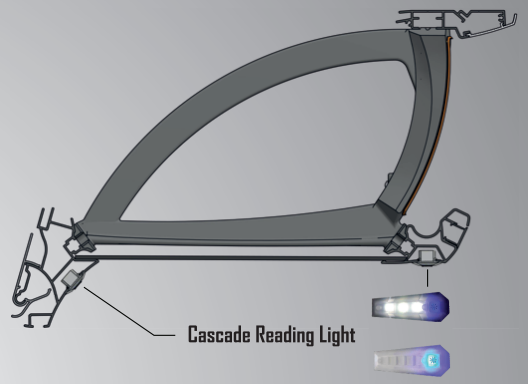

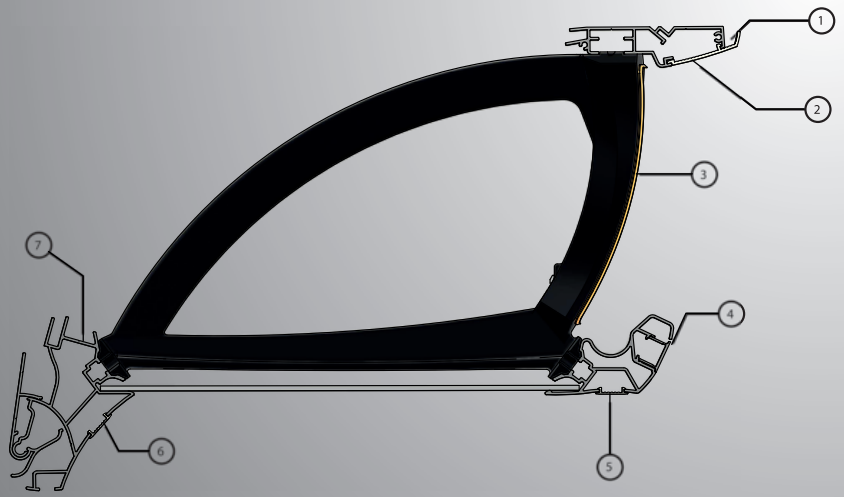

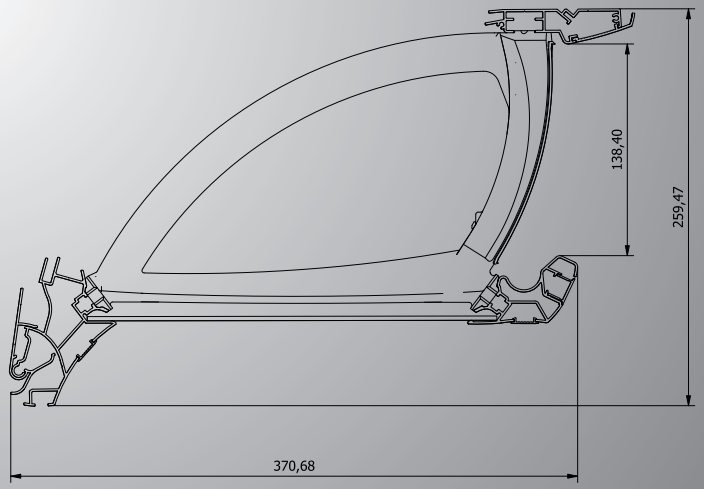

LONG ZENITH LUGGAGE RACK ONLY DOUBLE LINE

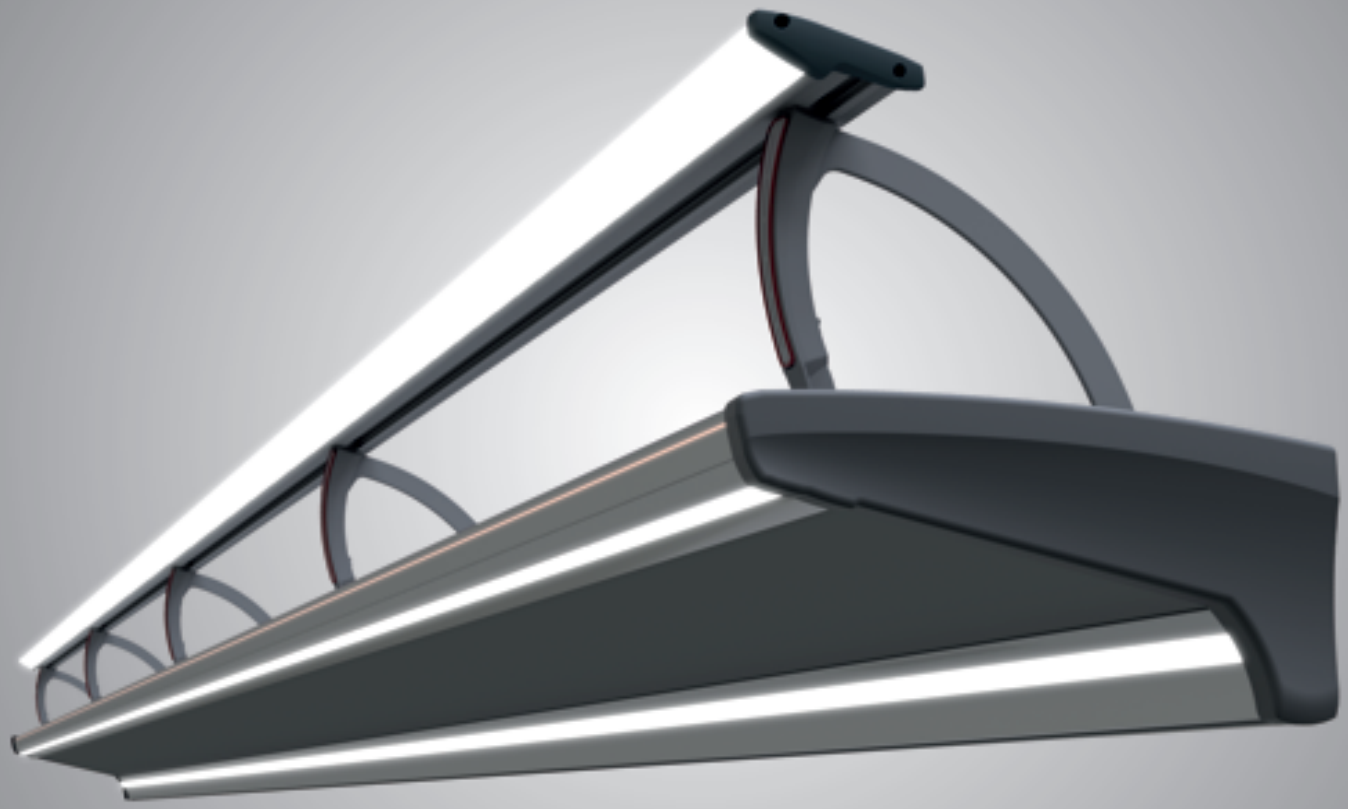

LONG ZENITH LUGGAGE RACK ONLY DOUBLE LINE

	Long Zenith Luggage Rack Only Double Line	Standart	Optional
1	Indirect Ceiling Lighting		
2	Ceiling Lighting	•	
3	Bracket Ligting		
4	Handrail Slim Line Lighting	•	
5	Corridor Side Lighting Channel (Or Cascade Reading Lights)	•	
6	Window Side Lighting Channel (Or Cascade Reading Lights)	•	
7	Indirect Loading Panel Lighting		

Any lighting position can be canceled, changed or added.

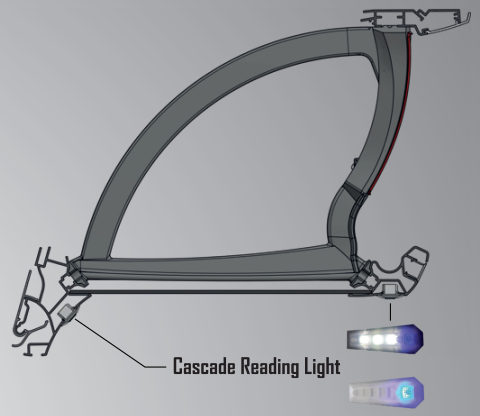

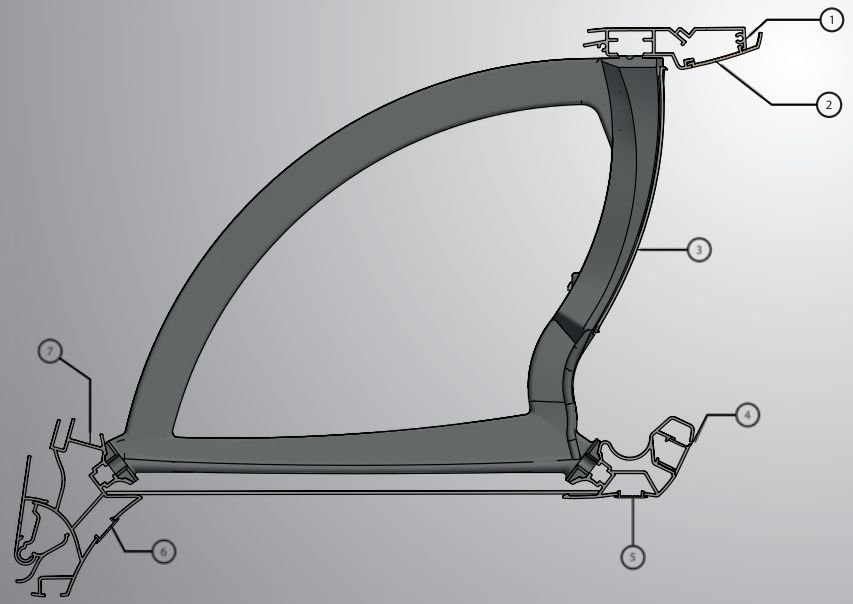

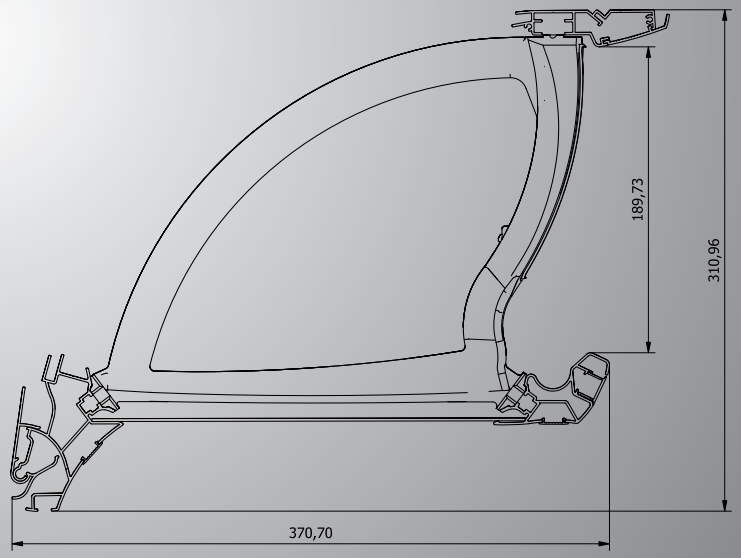

HARMONY LUGGAGE RACK ONLY SINGLE LINE

HARMONY LUGGAGE RACK ONLY SINGLE LINE

	Harmony Luggage Rack Only Single Line	Standart	Optional
1	Indirect Ceiling Lighting		
2	Ceiling Lighting	•	
3	Bracket Ligting		
4	Handrail Lighting	•	
5	Window Side Lighting Channel (Or Cascade Reading Lights)		
6	Indirect Loading Panel Lighting		

Any lighting position can be canceled, changed or added.

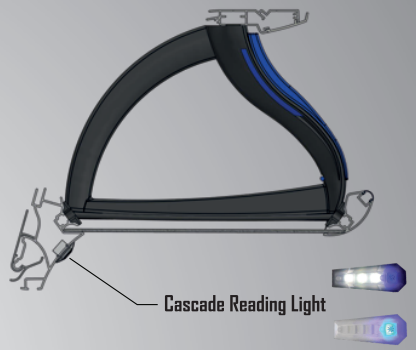

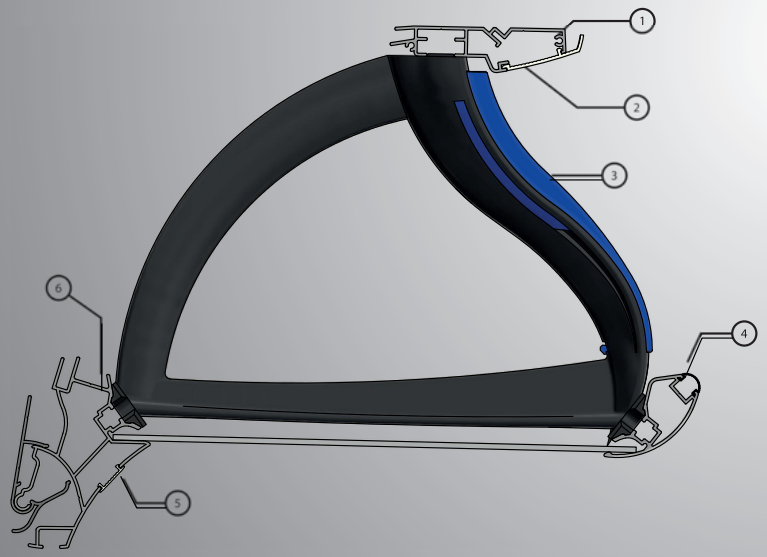

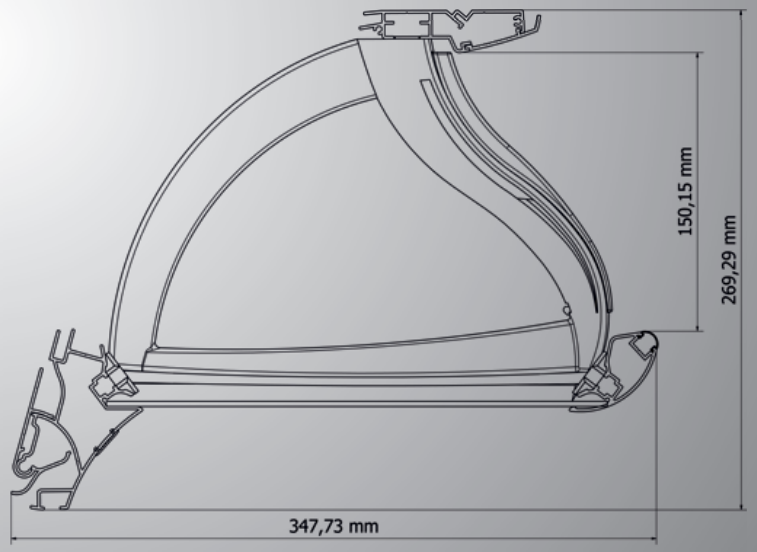

HARMONY LUGGAGE RACK ONLY DOUBLE LINE

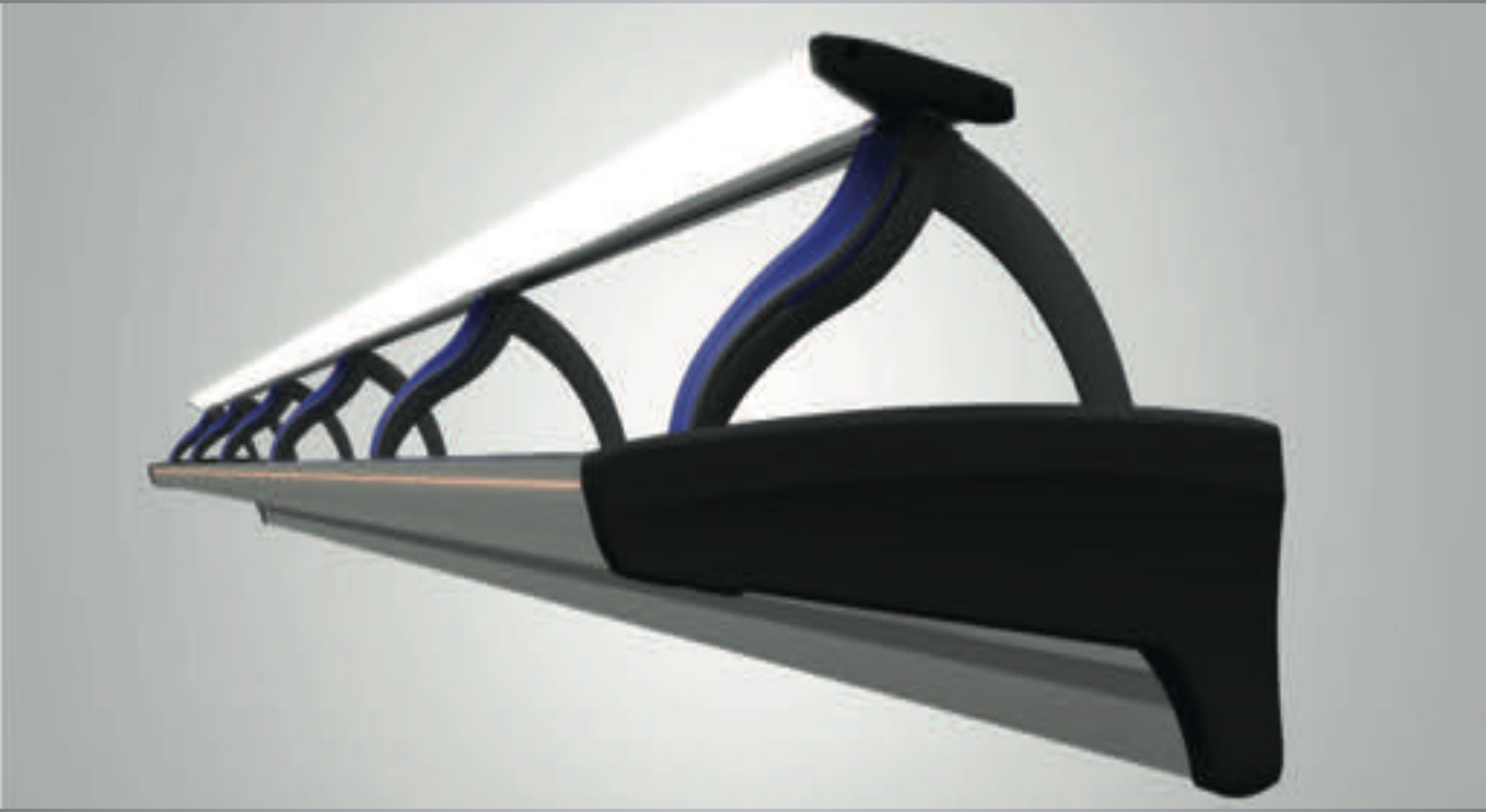

HARMONY LUGGAGE RACK ONLY DOUBLE LINE

	Harmony Luggage Rack Only Double Line	Standart	Optional
1	Indirect Ceiling Lighting	•	
2	Ceiling Lighting	•	
3	Bracket Ligting		
4	Handrail Slim Line Lighting	•	
5	Corridor Side Lighting Channel (Or Cascade Reading Lights)	•	
6	Window Side Lighting Channel (Or Cascade Reading Lights)	•	
7	Indirect Loading Panel Lighting		

Any lighting position can be canceled, changed or added.

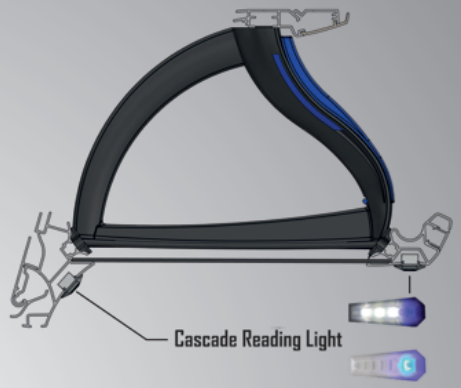

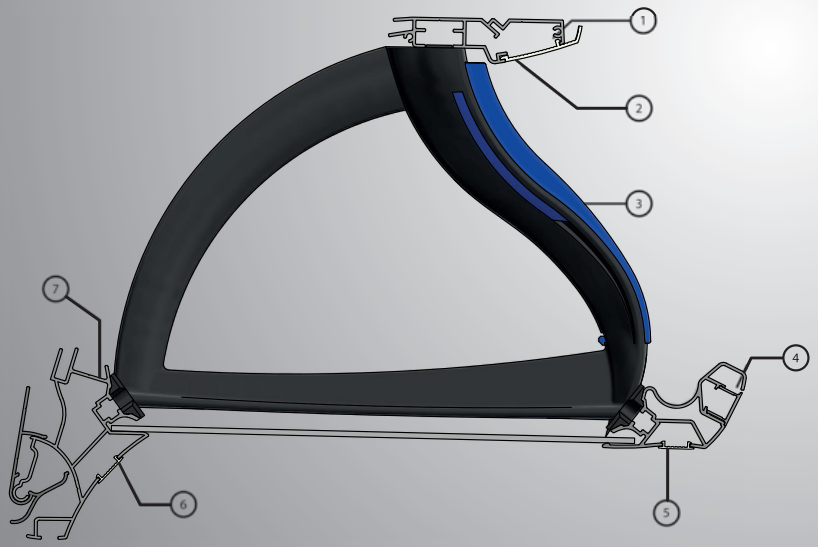

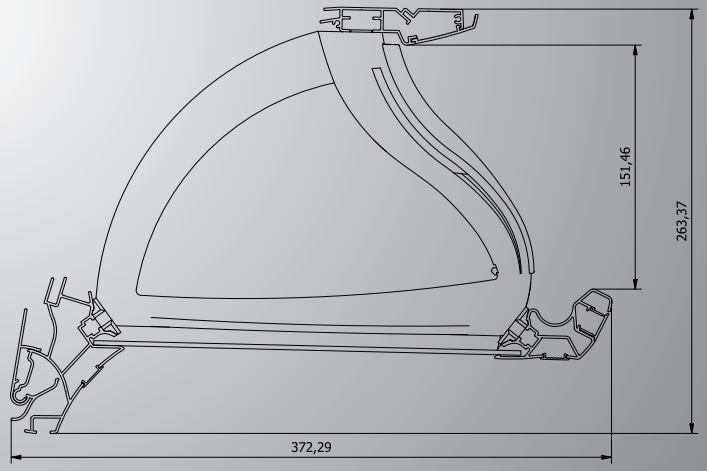

Product Code: 002_02

CLASSY LUGGAGE RACK ONLY SINGLE LINE

CLASSY LUGGAGE RACK ONLY SINGLE LINE

Classy Luggage Rack Only Single Line	Standart	Optional
1 Indirect Ceiling Lighting		
2 Ceiling Lighting	•	
3 Bracket Ligting		
4 Handrail Lighting	•	
5 Window Side Lighting Channel (Or Cascade Reading Lights)		
6 Indirect Loading Panel Lighting		

Any lighting position can be canceled, changed or added.

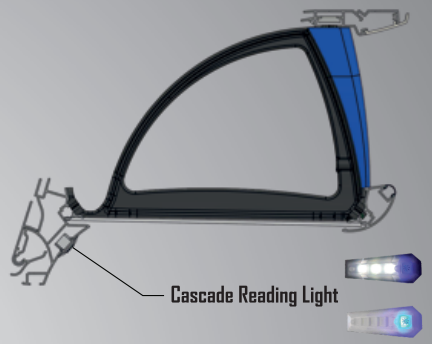

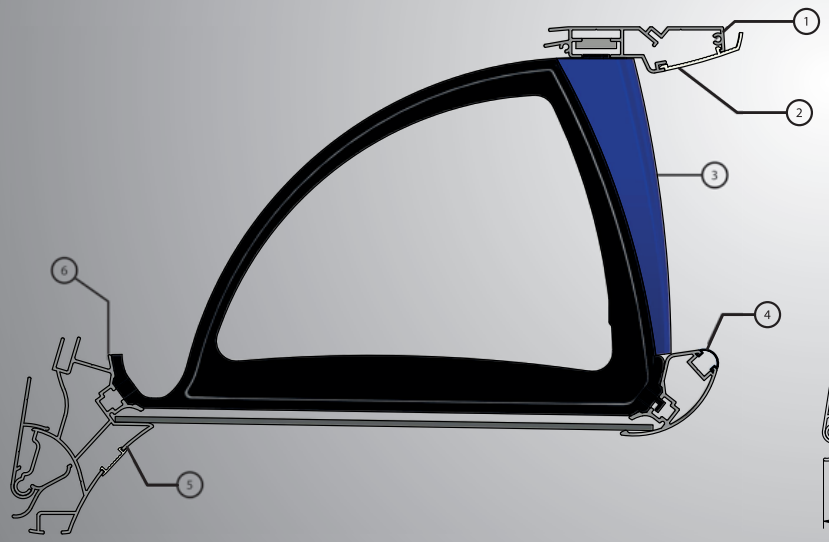

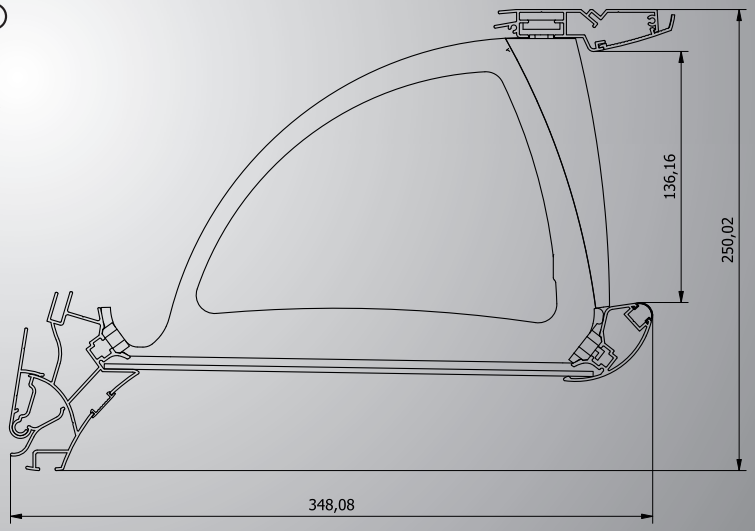

Product Code: 002_03

CLASSY LUGGAGE RACK ONLY DOUBLE LINE

CLASSY LUGGAGE RACK ONLY DOUBLE LINE

Classy Luggage Rack Only Double Line	Standart	Optional
1 Indirect Ceiling Lighting		
2 Ceiling Lighting	•	
3 Bracket Ligting		
4 Handrail Slim Line Lighting	•	
5 Corridor Side Lighting Channel (Or Cascade Reading Lights)	•	
6 Window Side Lighting Channel (Or Cascade Reading Lights)	•	
7 Indirect Loading Panel Lighting		

Any lighting position can be canceled, changed or added.

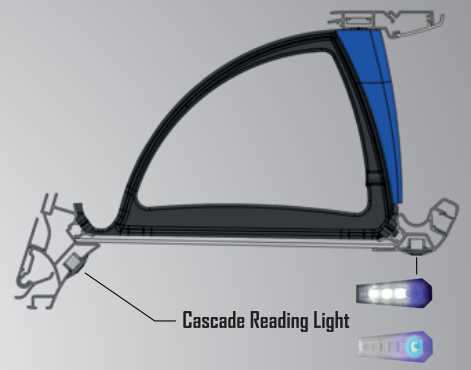

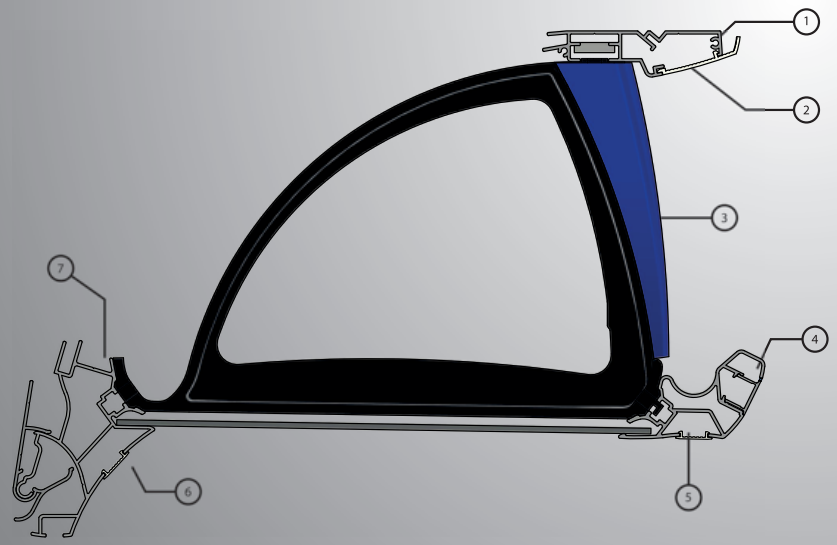

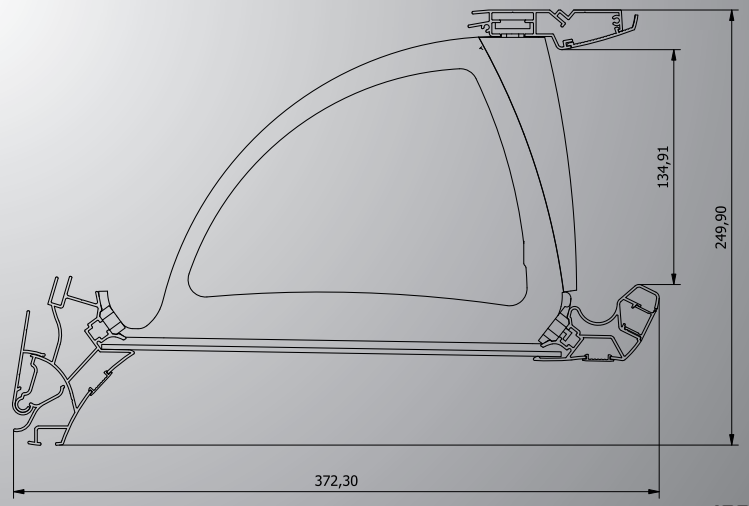

Product Code: 034_01

FLEXI LUGGAGE RACK ONLY

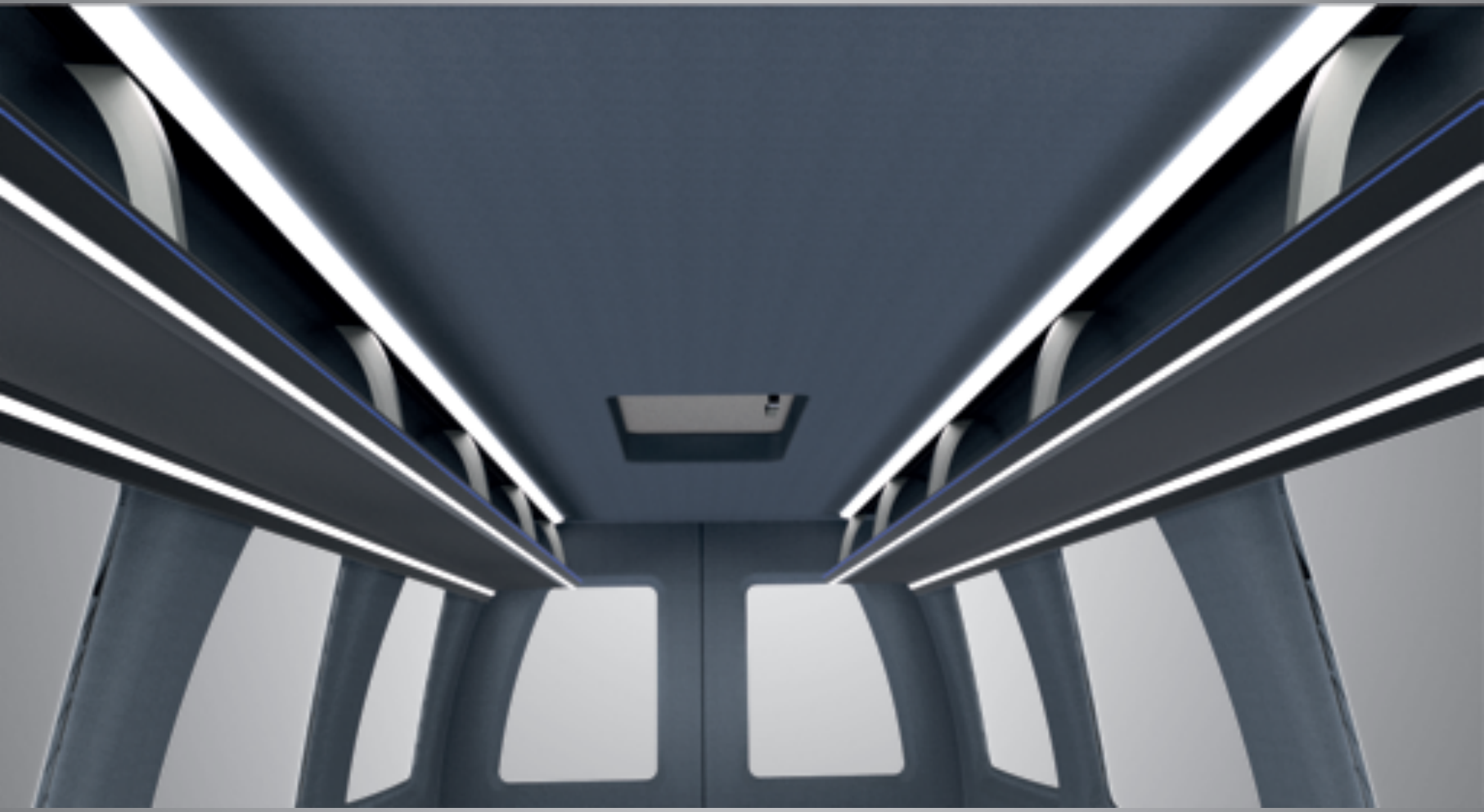

FLEXI LUGGAGE RACK ONLY

	Flexi Luggage Rack Only	Standart	Optional
1	Indirect Ceiling Lighting	•	
2	Ceiling Lighting	•	
3	Handrail Slim Line Lighting		
4	Corridor Side Lighting Channel (Or Cascade Reading Lights)	•	
5	Window Side Lighting Channel (Or Cascade Reading Lights)		
6	Indirect Loading Panel Lighting		

Any lighting position can be canceled, changed or added.

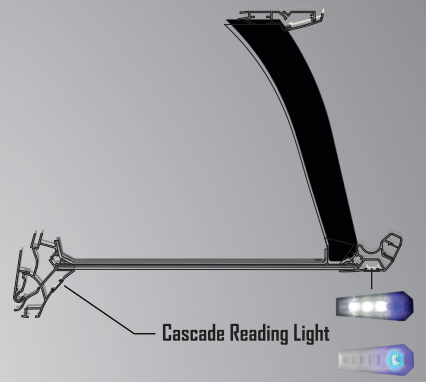

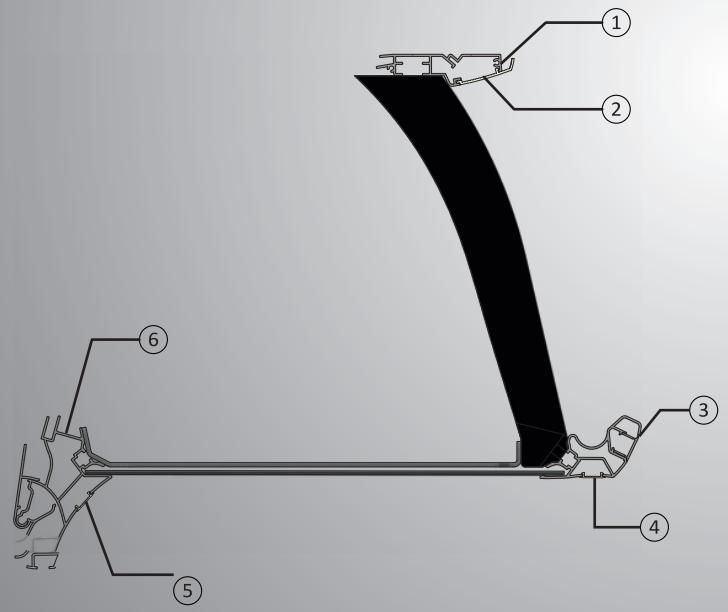

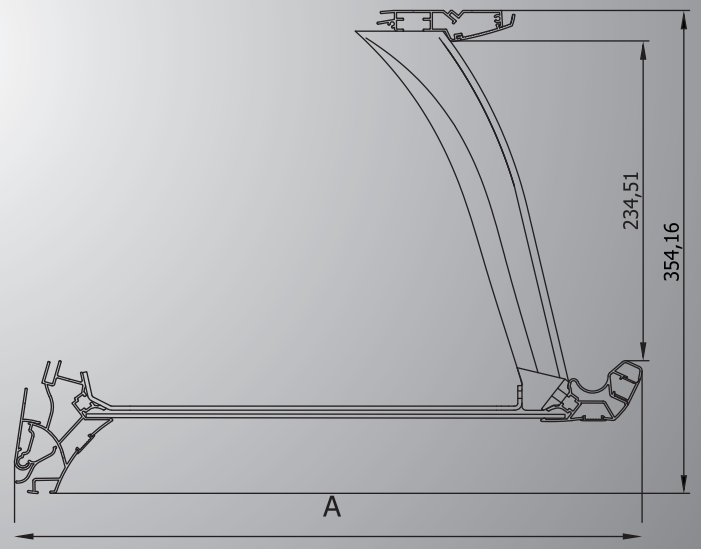

BASIC L TYPE LUGGAGE RACK ONLY

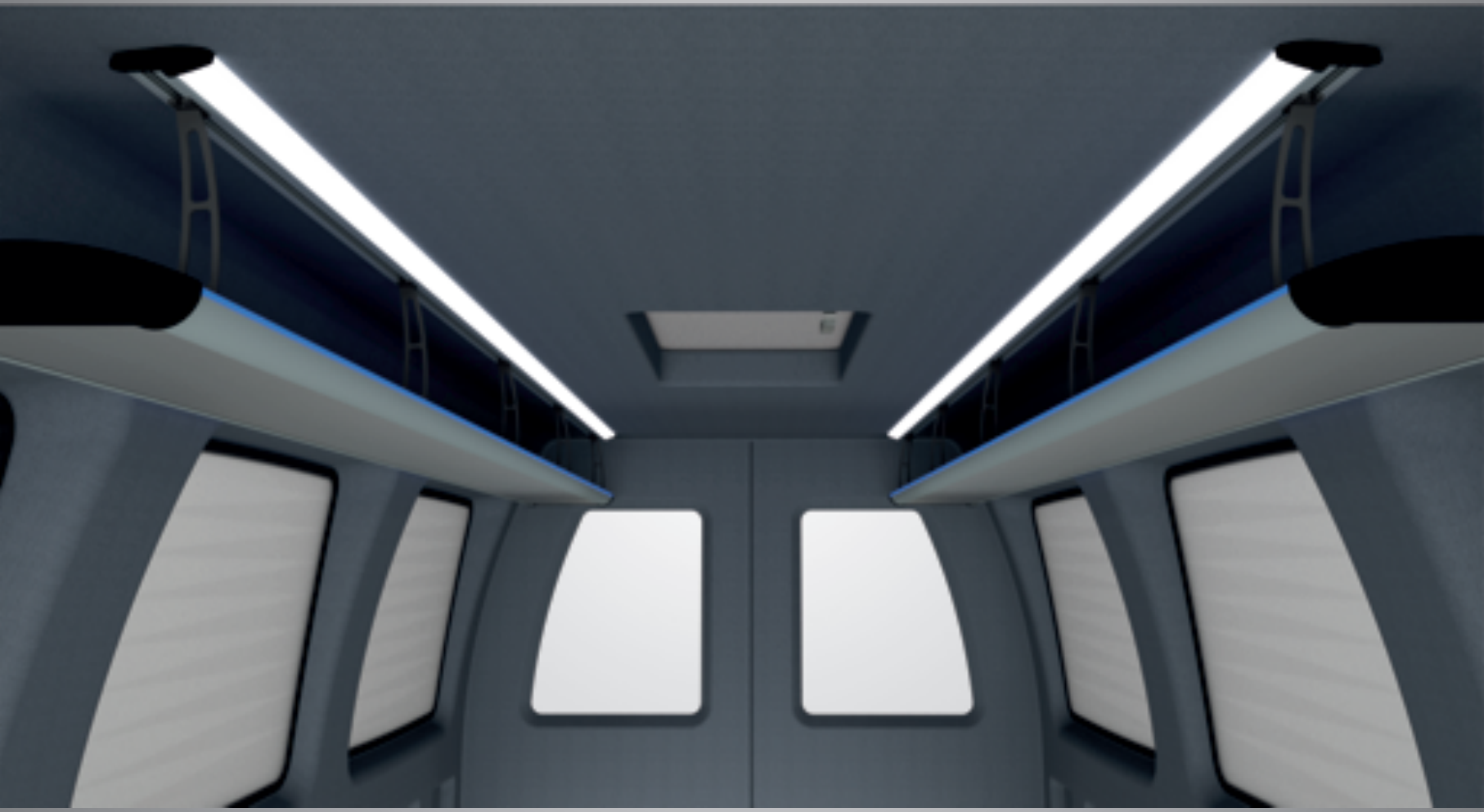

BASIC L TYPE LUGGAGE RACK ONLY

Basic L Type Luggage Rack Only	Standart	Optional
1 Indirect Ceiling Lighting		
2 Ceiling Lighting	•	
3 Handrail Lighting	•	

Any lighting position can be canceled, changed or added.

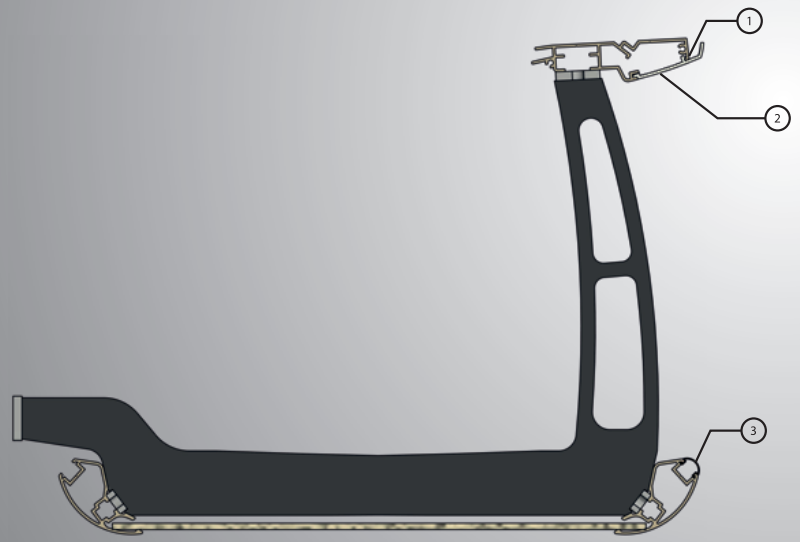

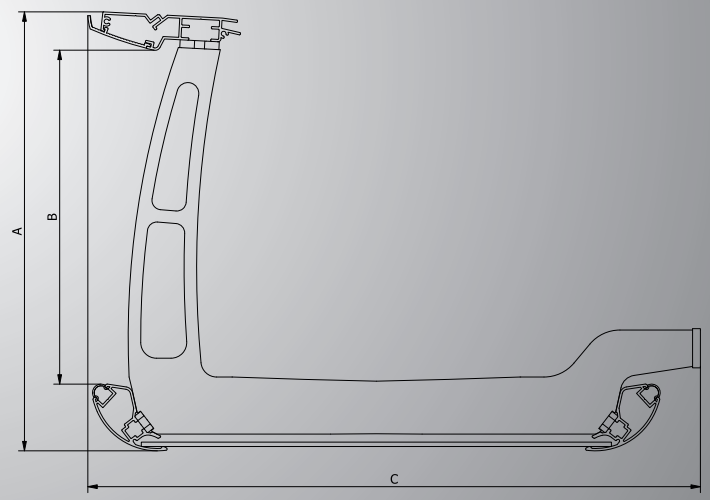

BASIC LUGGAGE RACK ONLY

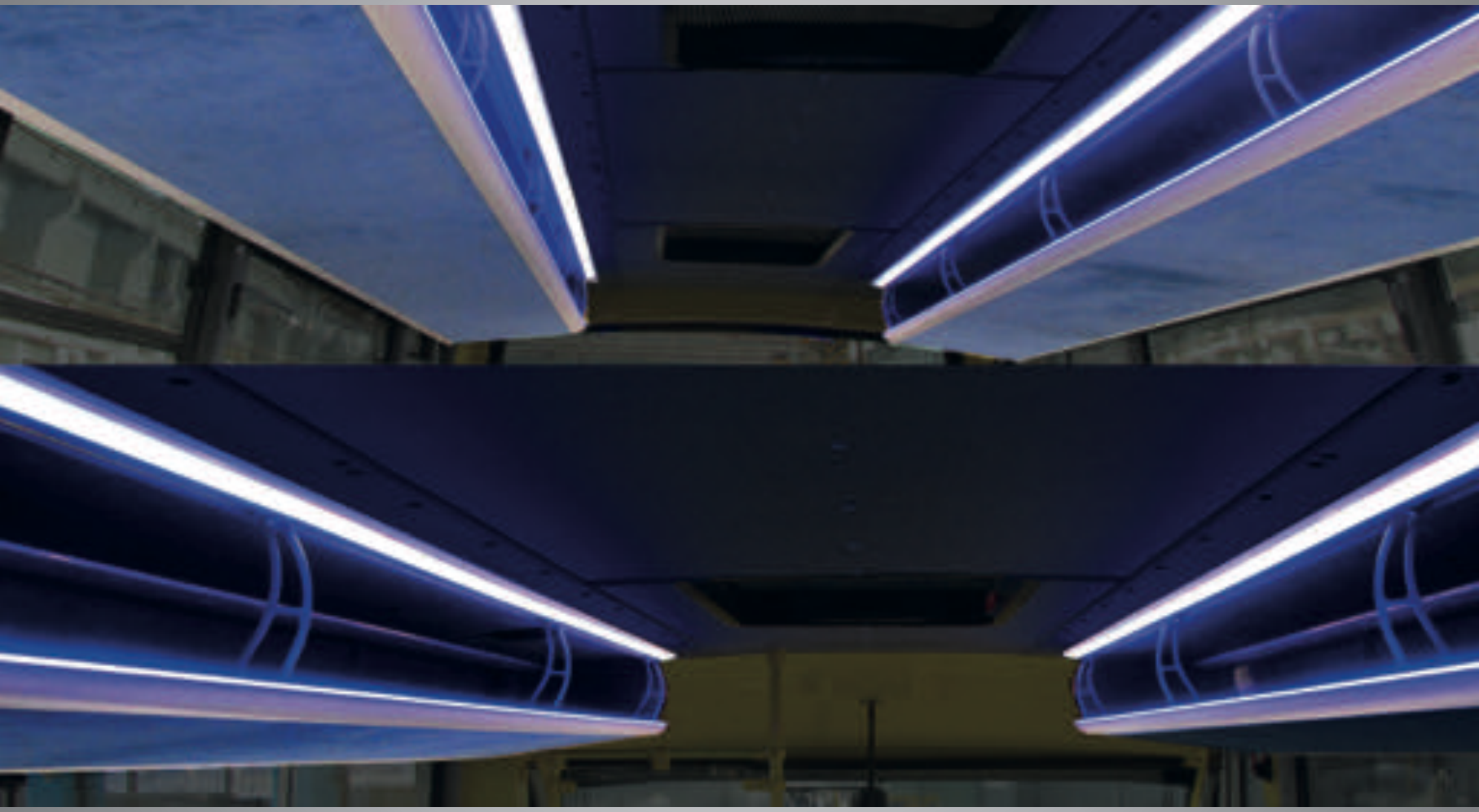

BASIC LUGGAGE RACK ONLY

	Basic Luggage Rack Only	Standart	Optional
1	Indirect Ceiling Lighting		
2	Ceiling Lighting	•	
3	Handrail Lighting	•	
4	Indirect Loading Panel Lighting		

Any lighting position can be canceled, changed or added.

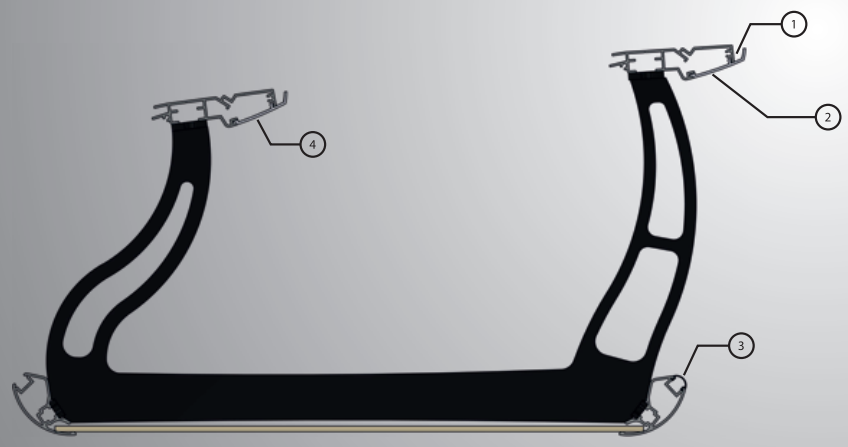

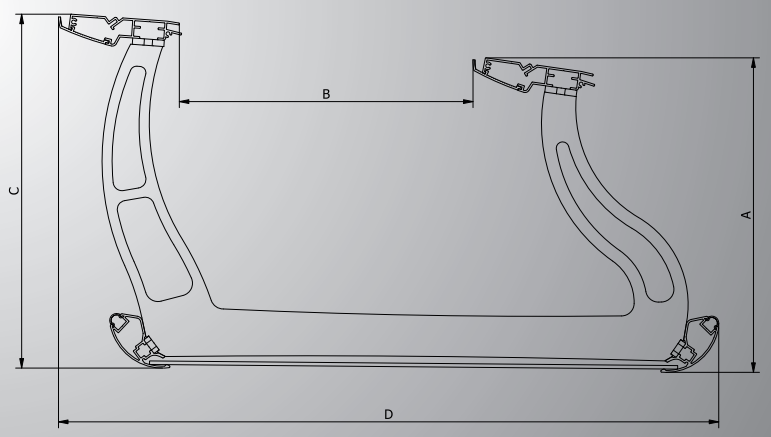

SMART LUGGAGE RACK ONLY

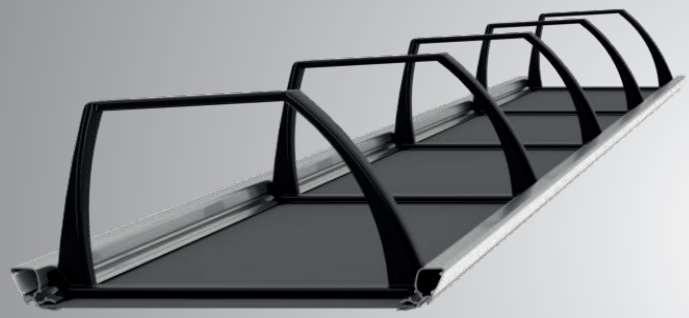

SMART LUGGAGE RACK ONLY

SMART LR&AC	Standart	Optional
1 Corridor Side Lighting Channel	•	
2 Window Side Lighting Channel	•	

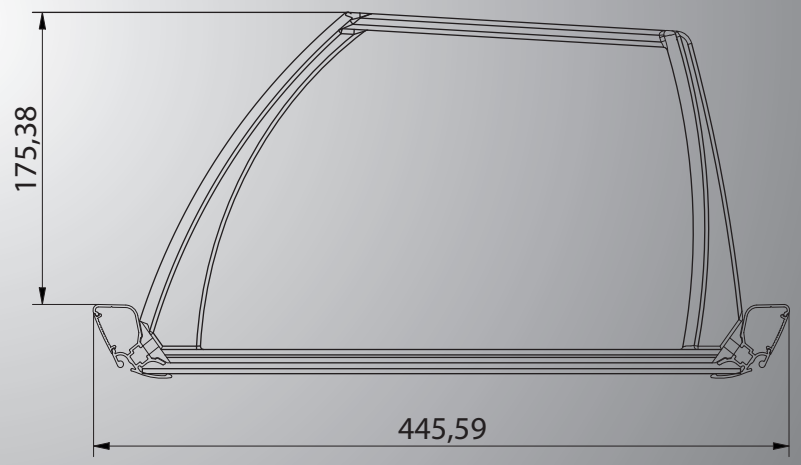

FLAP ASSEMBLY SYSTEM

Classy Flap Assembly (Product Code: AP_0006_R01)

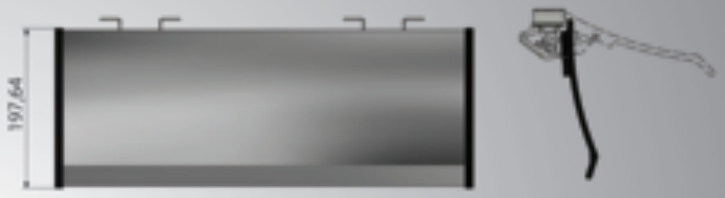

Concave Flap Assembly (Product Code: AP_0076)

Harmony Flap Assembly (Product Code: AP_0030)

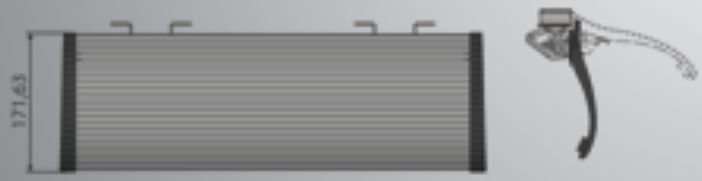

Convex Flap Assembly (Product Code: AP_0079)

Service Sets, Spacers, Reading Lights, Air Diffusers

ELEGANT SERVICE SET WITH TOUCH BUTTONS

COLOUR OPTIONS

- RAL 9005 black
- RAL 7035 light gray
- RAL 7037 mid gray
- RAL 9023 dark gray
- RAL 1015 light beige
- RAL 1019 beige

ELEGANT SERVICE SET WITH PUSH BUTTONS

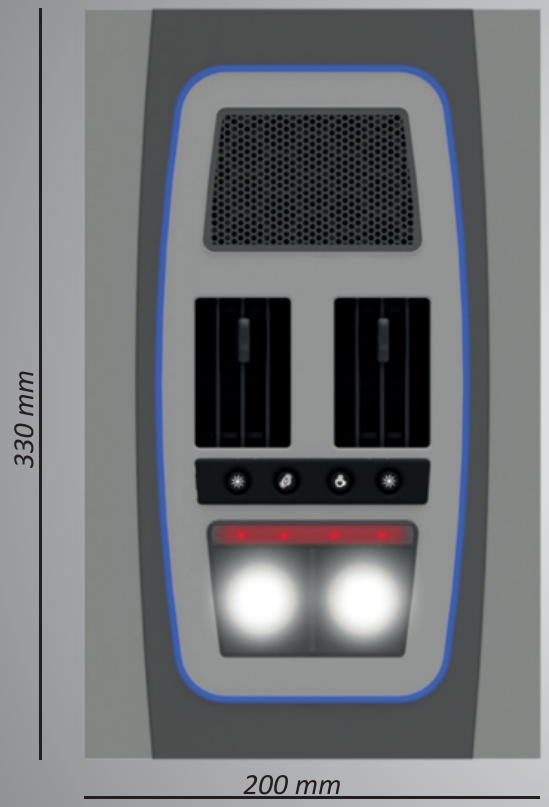

Push Button Details

COLOUR OPTIONS

- RAL 9005 black
- RAL 7035 light gray
- RAL 7037 mid gray
- RAL 9023 dark gray
- RAL 1015 light beige
- RAL 1019 beige

STANDART INTENSE SERVICE SET

COLOUR OPTIONS

- *RAL 9005 black*
- *RAL 7035 light gray*
- *RAL 7037 mid gray*
- *RAL 9023 dark gray*
- *RAL 1015 light beige*
- *RAL 1019 beige*

LUXURY INTENSE SERVICE SET

COLOUR OPTIONS

- RAL 9005 black
- RAL 7035 light gray
- RAL 7037 mid gray
- RAL 9023 dark gray
- RAL 1015 light beige
- RAL 1019 beige

STANDART INTENSE SERVICE SET WITH WHEEL AIR DIFFUSERS

COLOUR OPTIONS

- *RAL 9005 black*
- *RAL 7035 light gray*
- *RAL 7037 mid gray*
- *RAL 9023 dark gray*
- *RAL 1015 light beige*
- *RAL 1019 beige*

LUXURY INTENSE SERVICE SET WITH WHEEL AIR DIFFUSERS

COLOUR OPTIONS

- *RAL 9005 black*
- *RAL 7035 light gray*
- *RAL 7037 mid gray*
- *RAL 9023 dark gray*
- *RAL 1015 light beige*
- *RAL 1019 beige*

DROPS SERVICE SET

COLOUR OPTIONS

- RAL 9005 black
- RAL 7035 light gray
- RAL 7037 mid gray
- RAL 9023 dark gray
- RAL 1015 light beige
- RAL 1019 beige

DROPS NARROW SERVICE SET

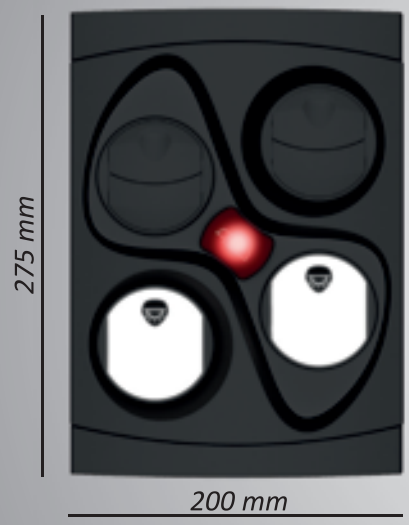

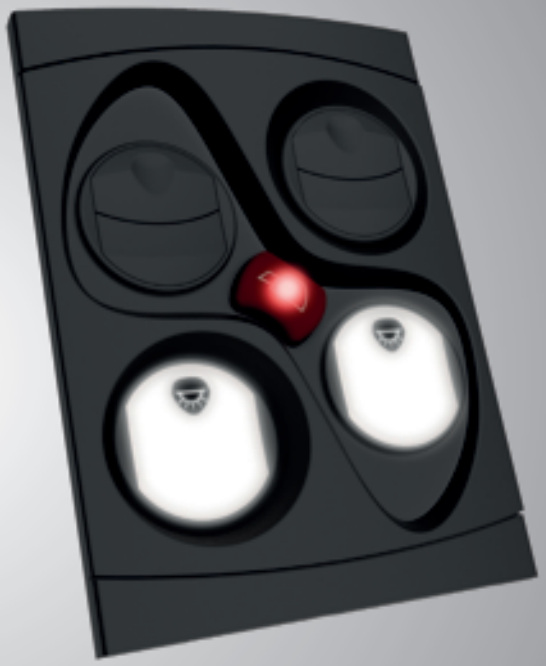

COLOUR OPTIONS

- RAL 9005 black
- RAL 7035 light gray
- RAL 7037 mid gray
- RAL 9023 dark gray
- RAL 1015 light beige
- RAL 1019 beige

JUNIOR SERVICE SET

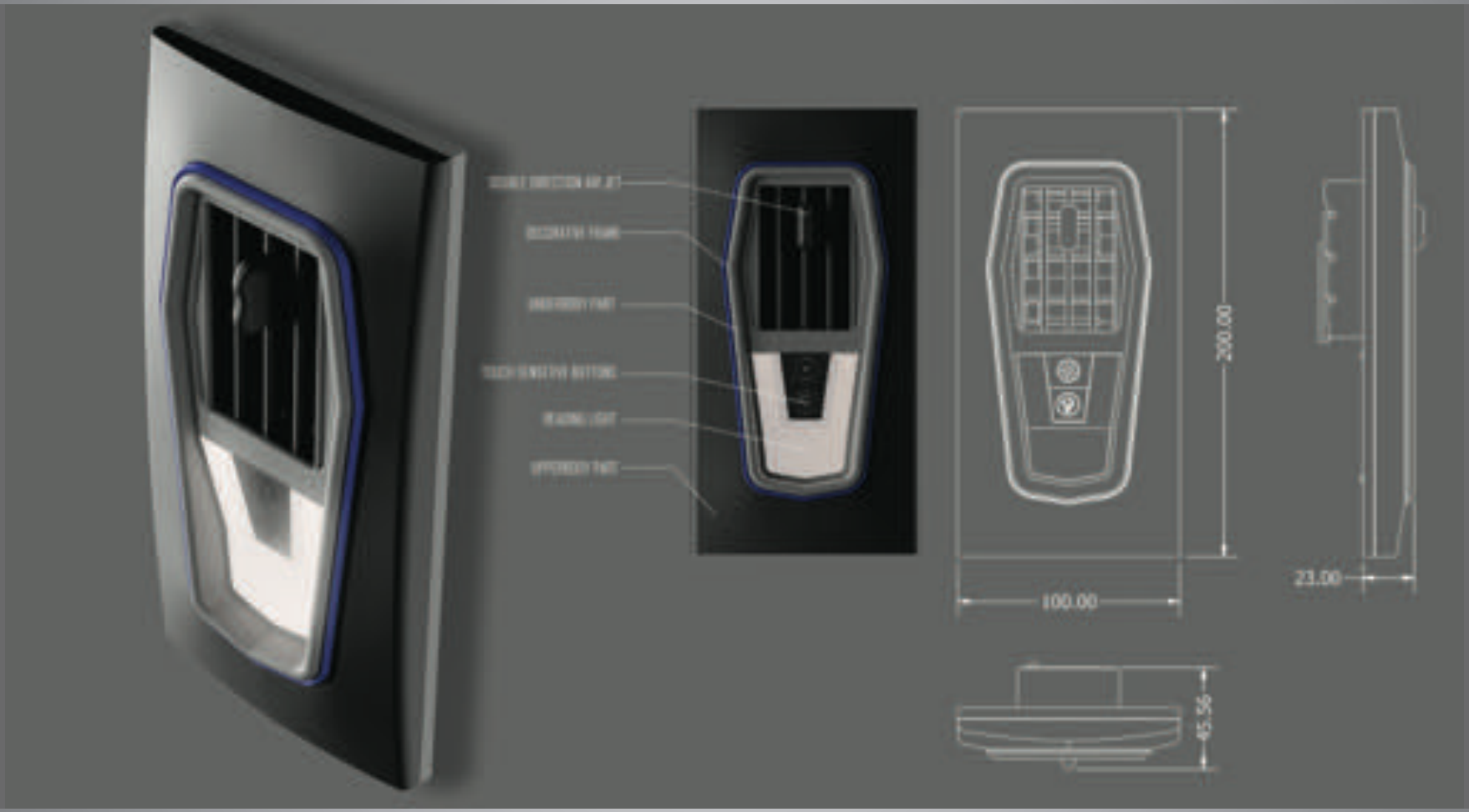

JUNIOR SERVICE SET

CHROME LOOK
WITHOUT LED

ORANGE
WITH OR WITHOUT LED

BLUE
WITH OR WITHOUT LED

GLOW IN THE DARK
WITHOUT LED
WITH BLUE OR WHITE LED

JUNIOR SPACER

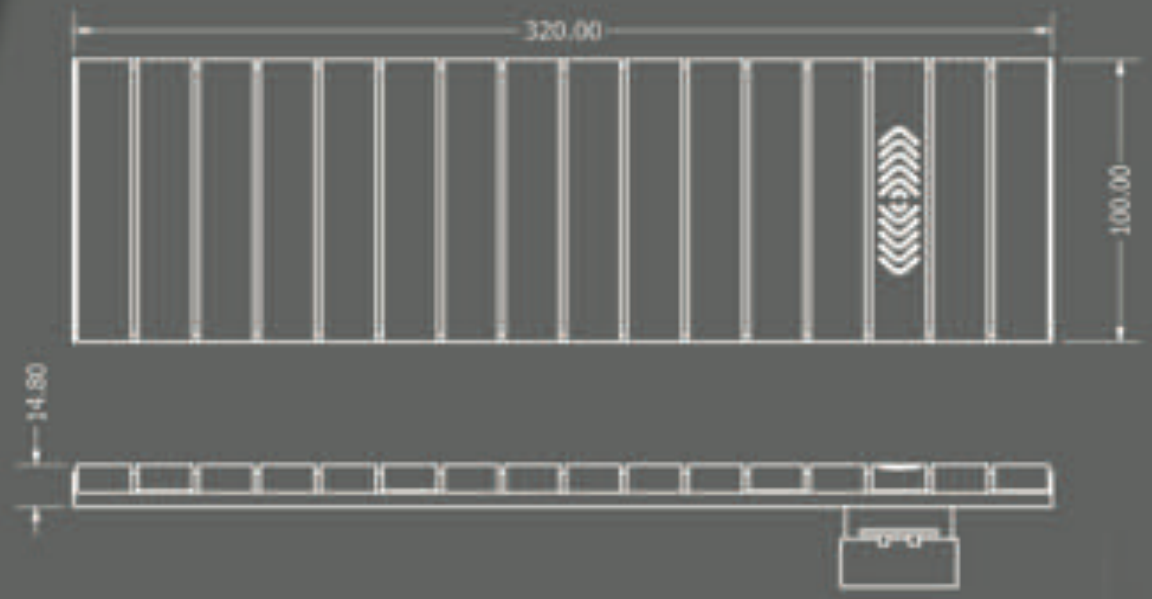

ELEGANT SPACER

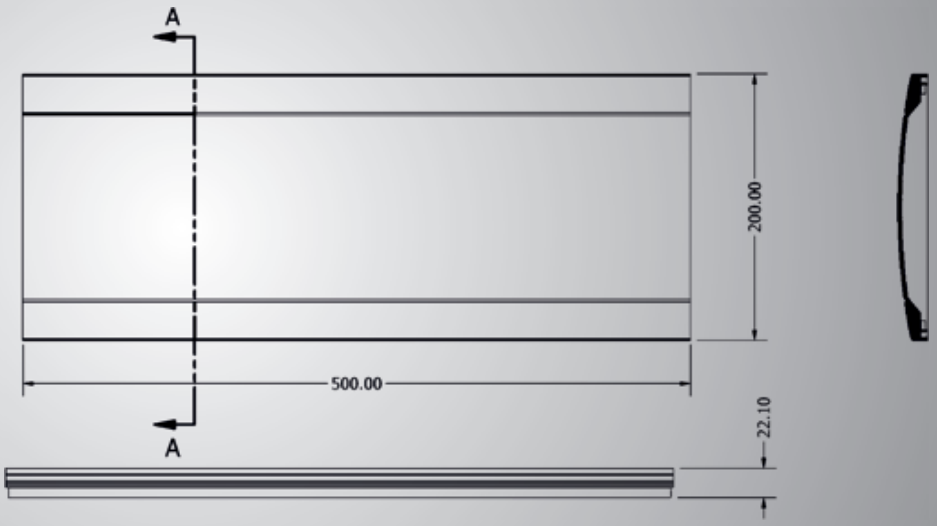

ELLIPTIC SPACER

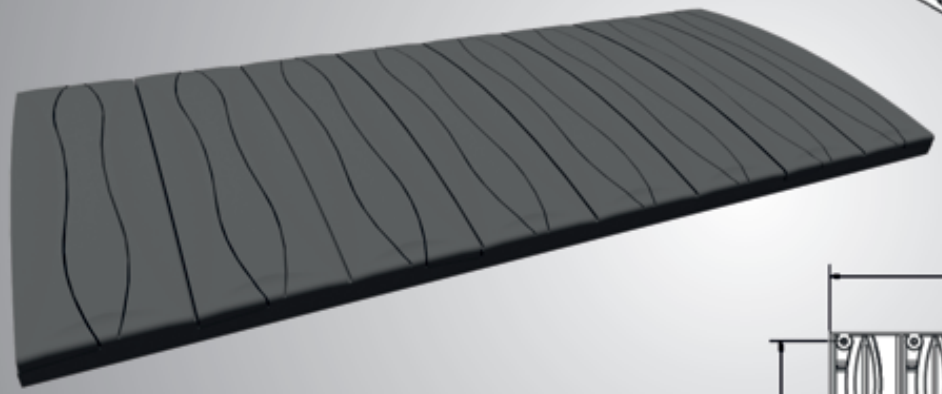

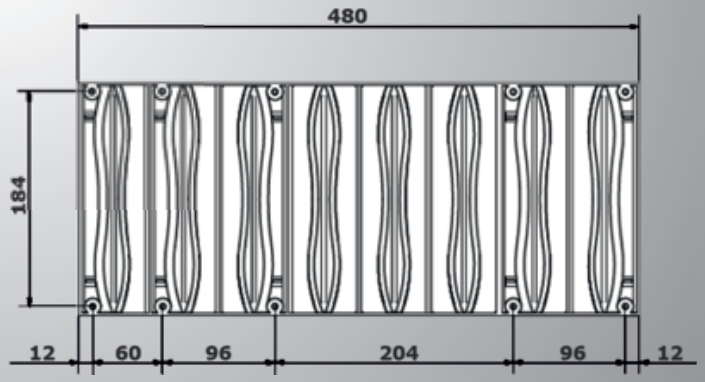

PLAIN SINGLE LAYER SPACER

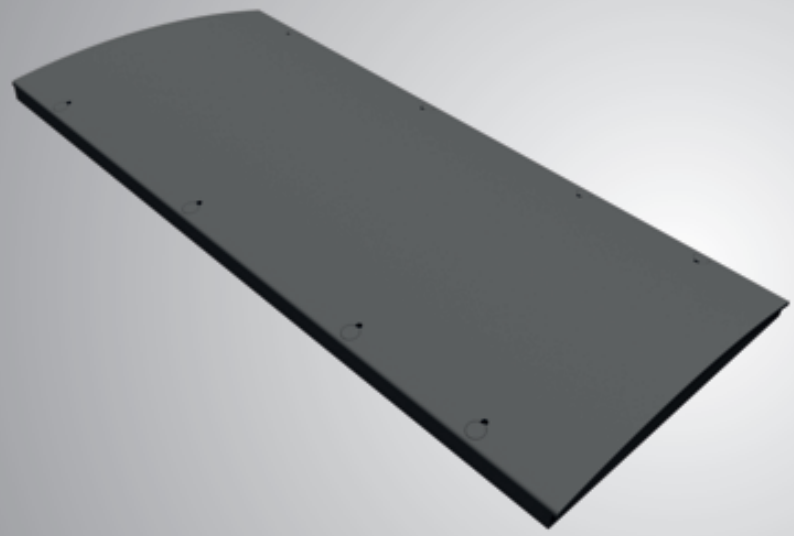

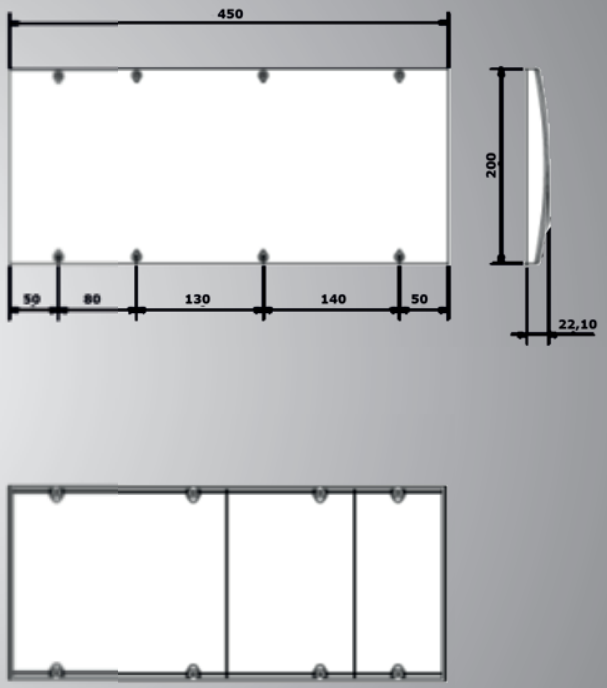

PLAIN DOUBLE LAYER SPACER

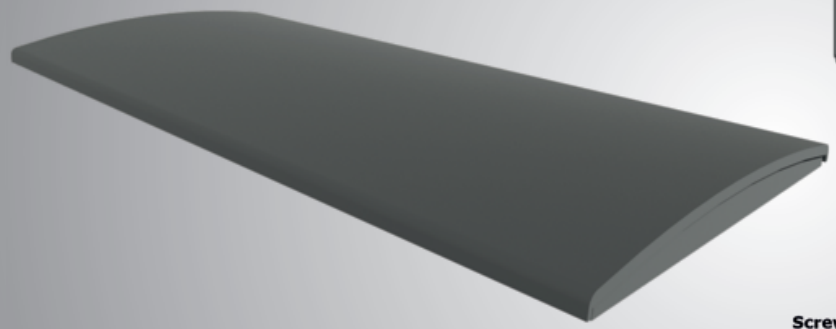

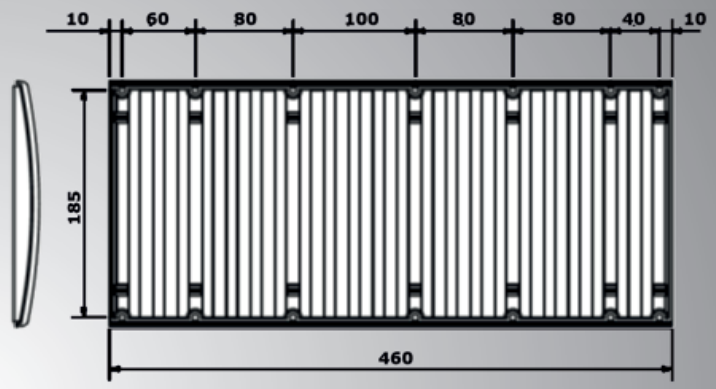

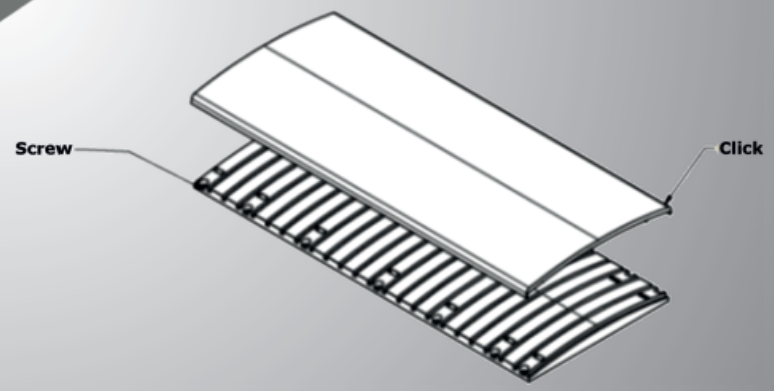

FLAT SPACER

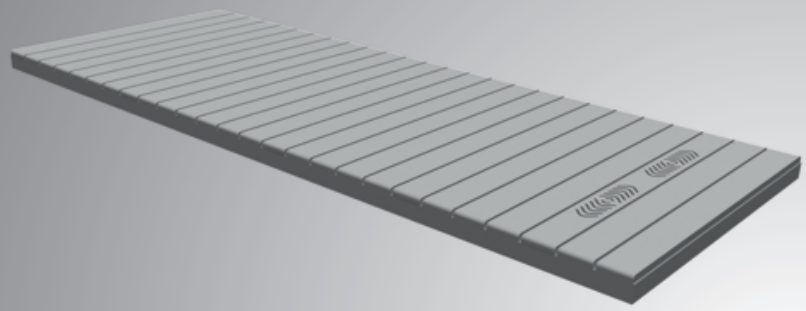

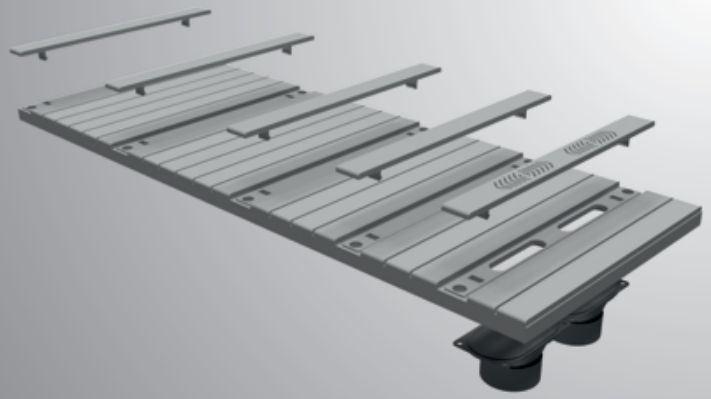

INTENSE SINGLE SERVICE SETS

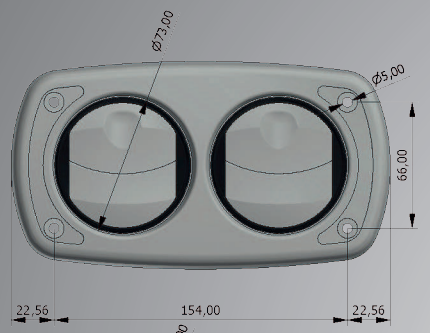

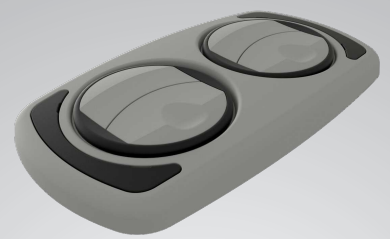

Intense Double Air Diffusers (AP_0021)

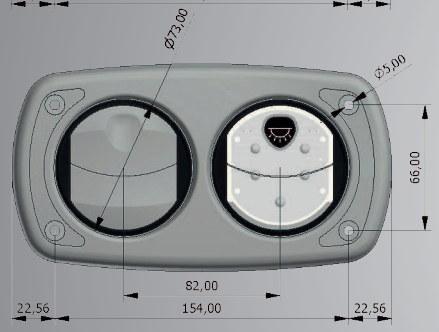

Intense Single Service Sets (AP_0037)

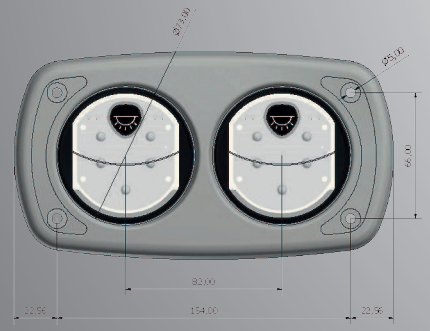

Intense Double Reading Lights (AP_0112)

INTENSE SINGLE SERVICE SETS WHEEL DESING

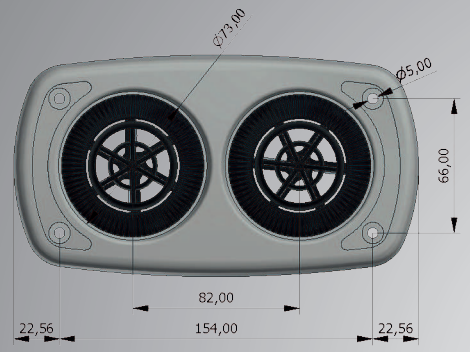

Intense Double Air Diffusers Wheel Design
(AP_0245)

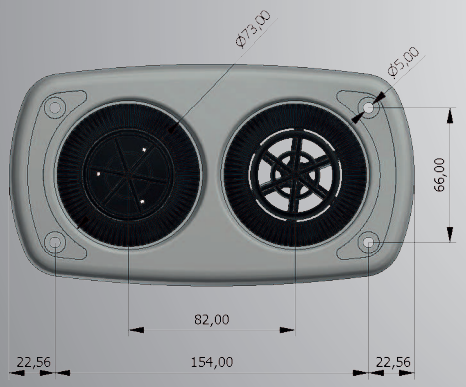

Intense Single Service Sets Wheel Design
(AP_0246)

INTENSE NARROW SINGLE SERVICE SETS

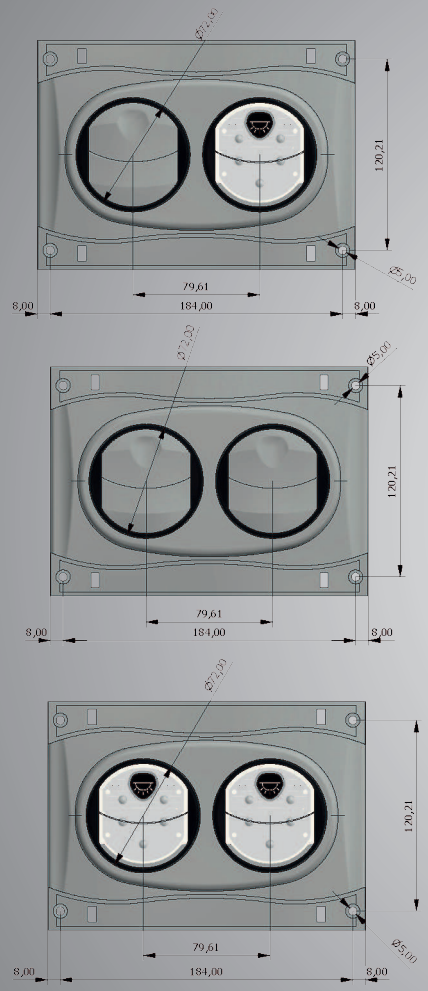

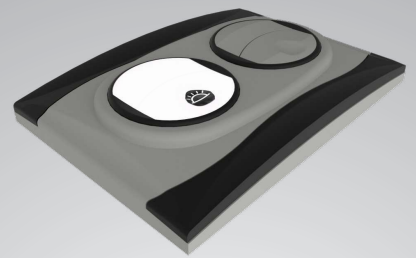

Intense Narrow Single Service Sets
(AP_0034)

Intense Narrow Double Air Diffusers
(AP_0115)

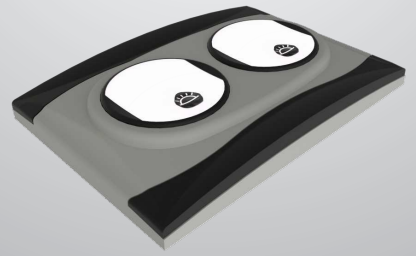

Intense Narrow Double Reading Lights
(AP_0116)

INTENSE NARROW SINGLE SERVICE SETS WHEEL DESIGN

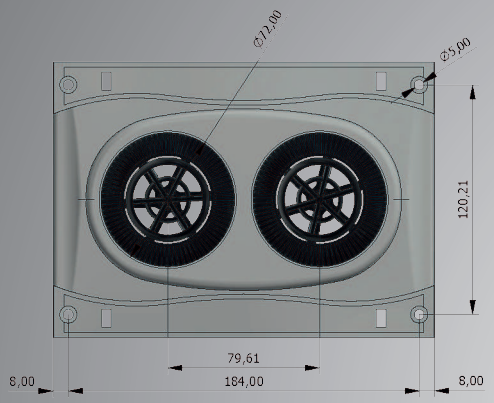

Intense Narrow Double Air Diffusers Wheel Design
(AP_0115)

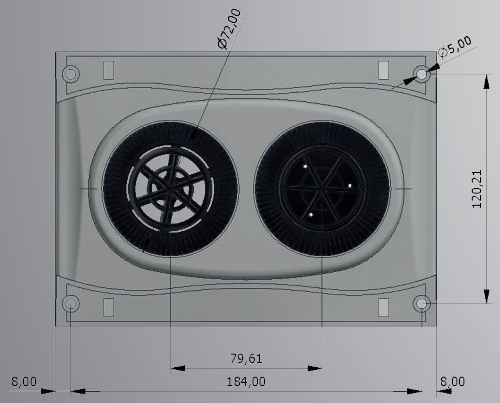

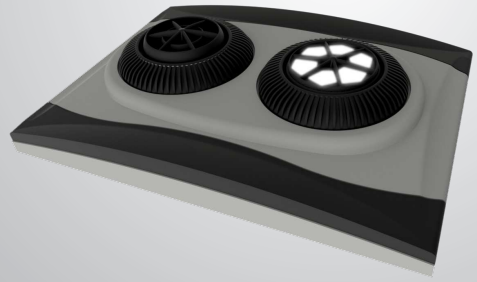

Intense Narrow Double Reading LightsWheel Design
(AP_0116)

INTENSE SINGLE READING LIGHT

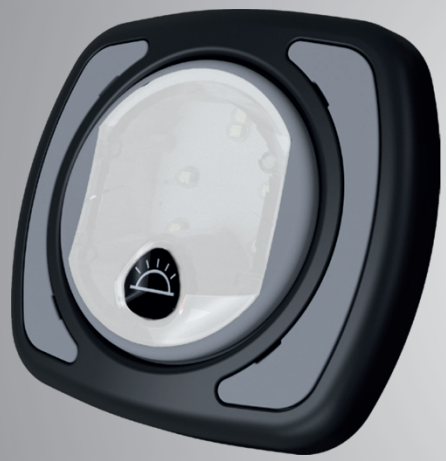

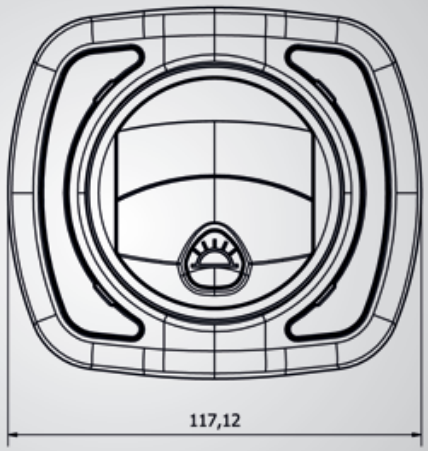

CASCADE READING LIGHT

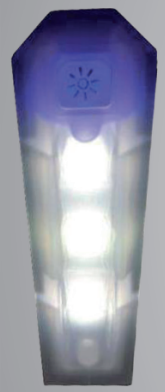

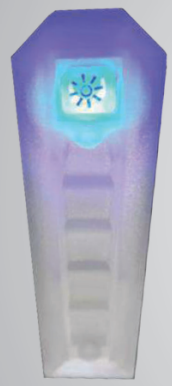

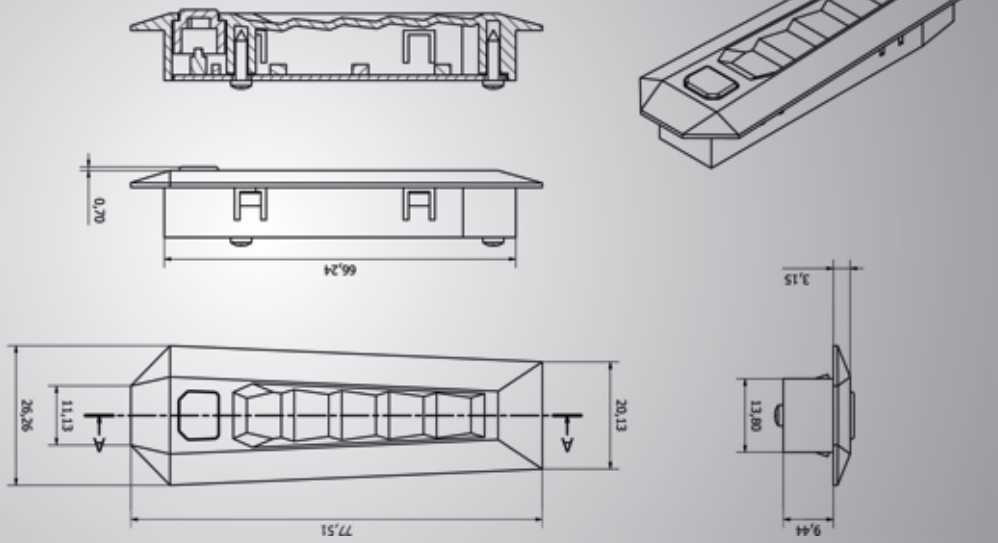

INTENSE SINGLE AIR DIFFUSER

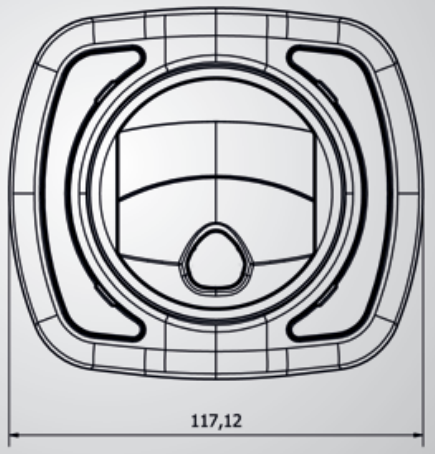

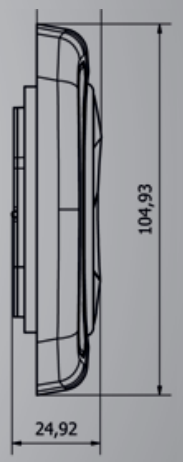

DROPS LOUDSPEAKER

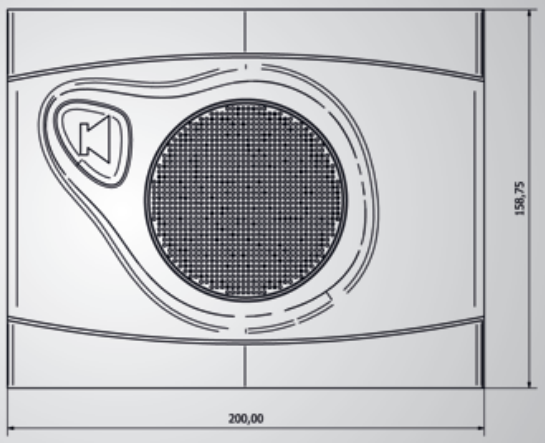

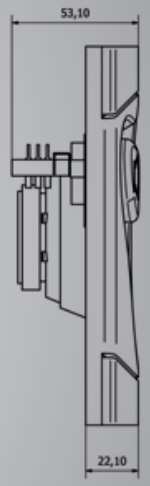

NOTES

Interior Lighting Profiles

ELITE BELOW WINDOW LIGHTING PROFILE V1

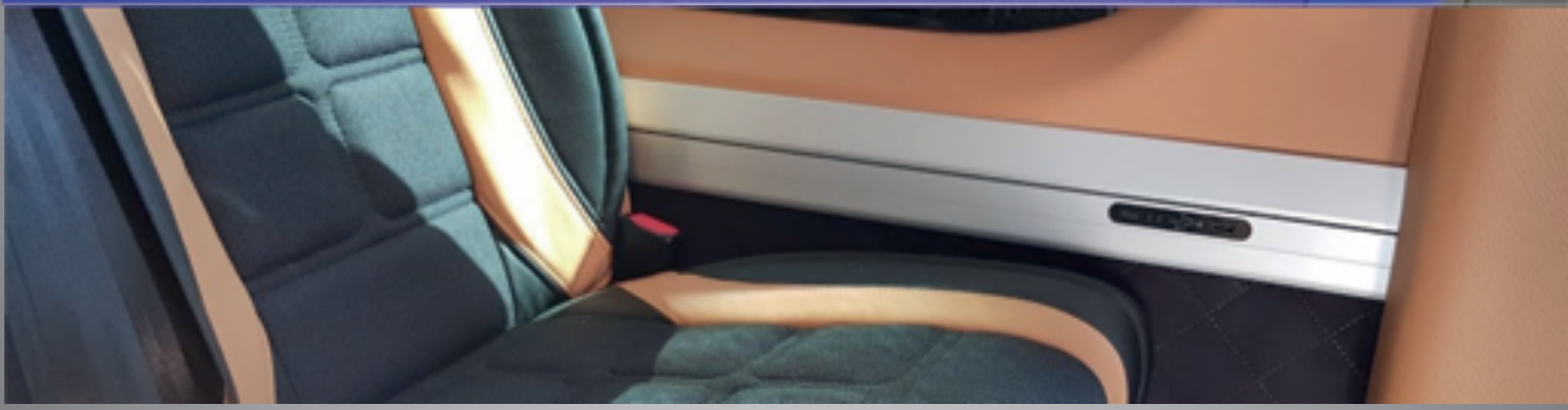

ELITE BELOW WINDOW LIGHTING PROFILE V1

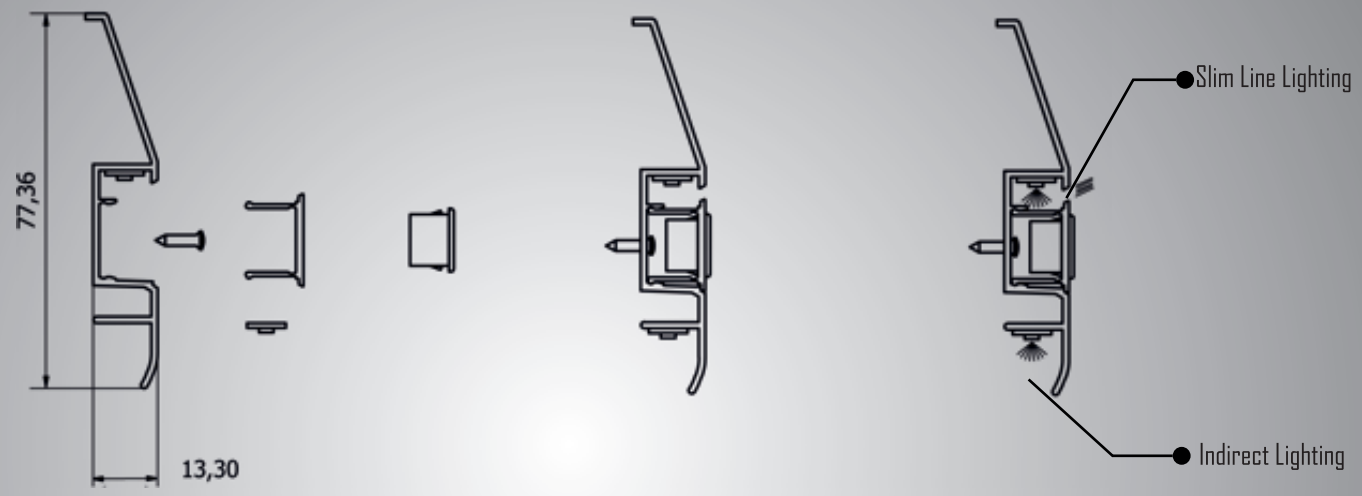

Port options:

Small Single USB Port
With Backlighted Lettering

Small Double USB Port
With Backlighted Lettering

Small Port (No USB)
With Backlighted Lettering

Lettering options; seat numbering, company name, logo etc.

ELITE BELOW WINDOW LIGHTING PROFILE V2

ELITE BELOW WINDOW LIGHTING PROFILE V2

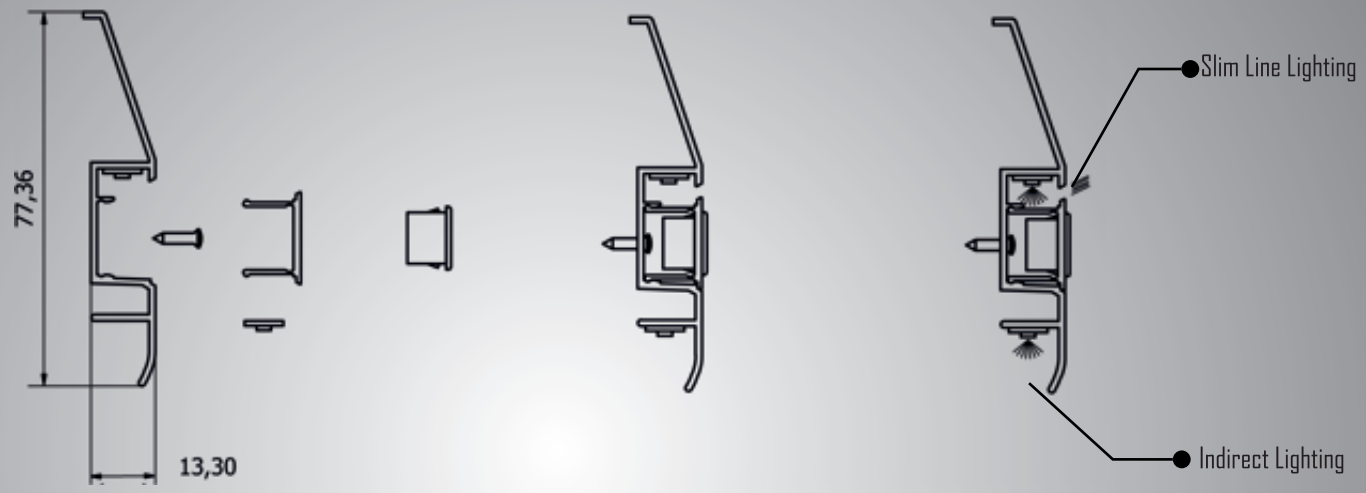

Port options:

Extended Single USB Port
With Backlighted Lettering

Extende Double USB Port
With Backlighted Lettering

Extended Port (No USB)
With Backlighted Lettering

Lettering options; seat numbering, company name, logo etc.

SIRIUS DOUBLE LIGHTED BELOW WINDOW PROFILE

SIRIUS DOUBLE LIGHTED BELOW WINDOW PROFILE

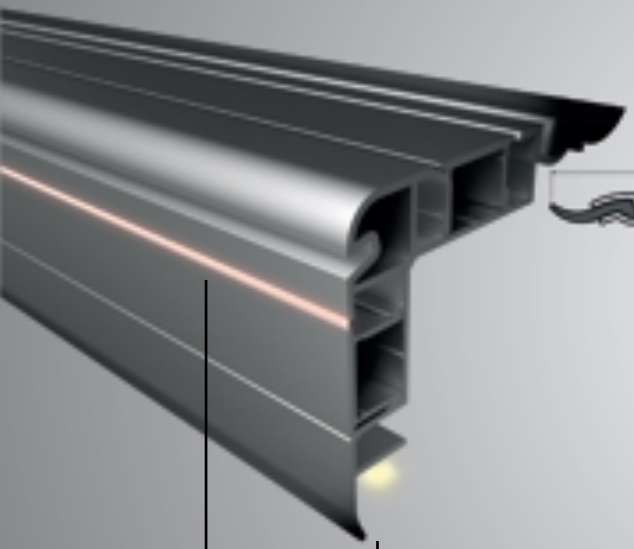

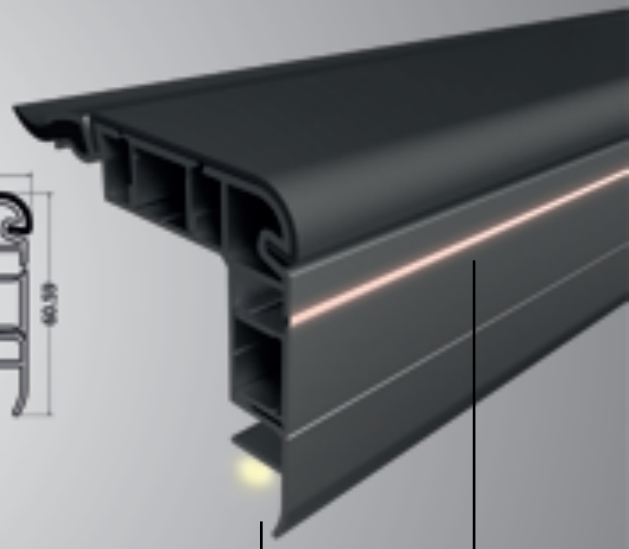

SIRIUS DOUBLE LIGHTED BELOW WINDOW PROFILE WITH CURTAIN RAIL

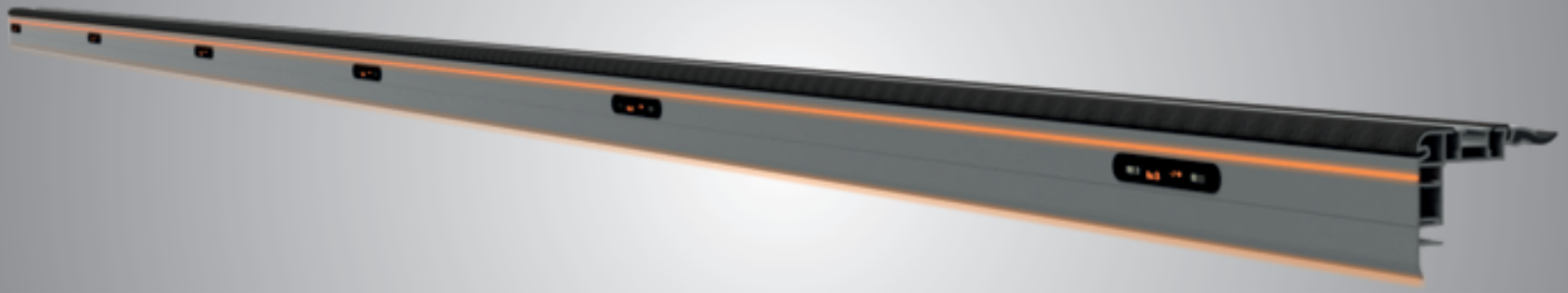

SIRIUS DOUBLE LIGHTED BELOW WINDOW PROFILE WITH CURTAIN RAIL

SLIM LIGHTED CEILING LIGHTING

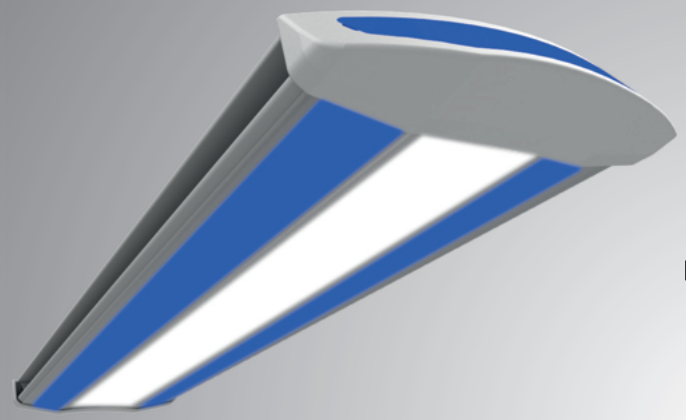

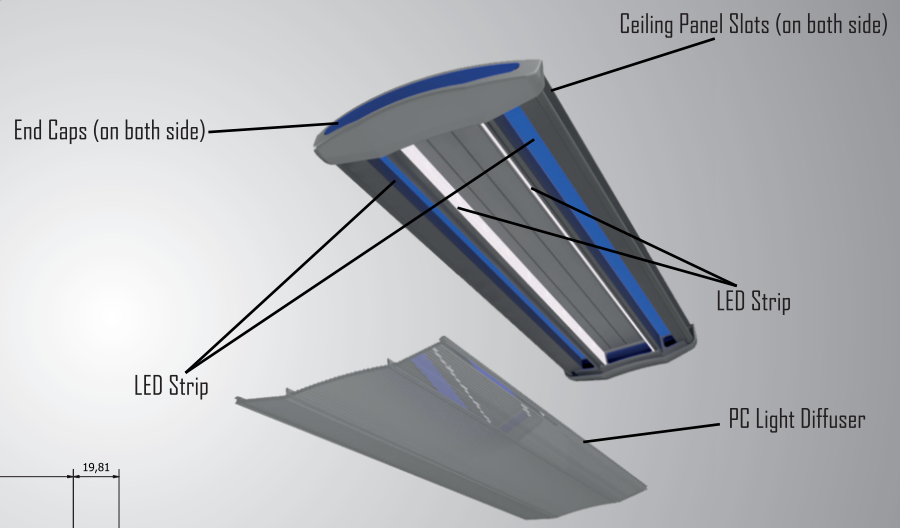

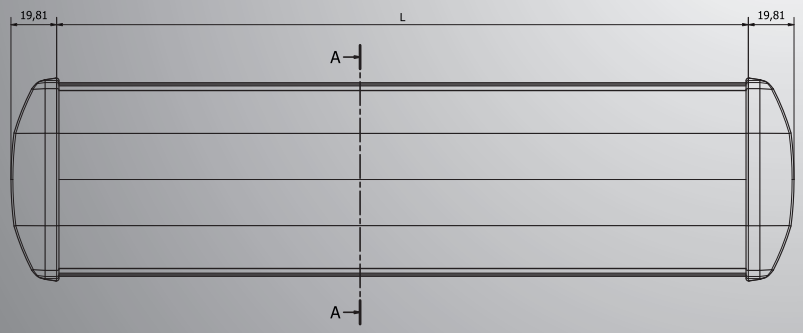

SUPER SINGLE CEILING LIGHTING

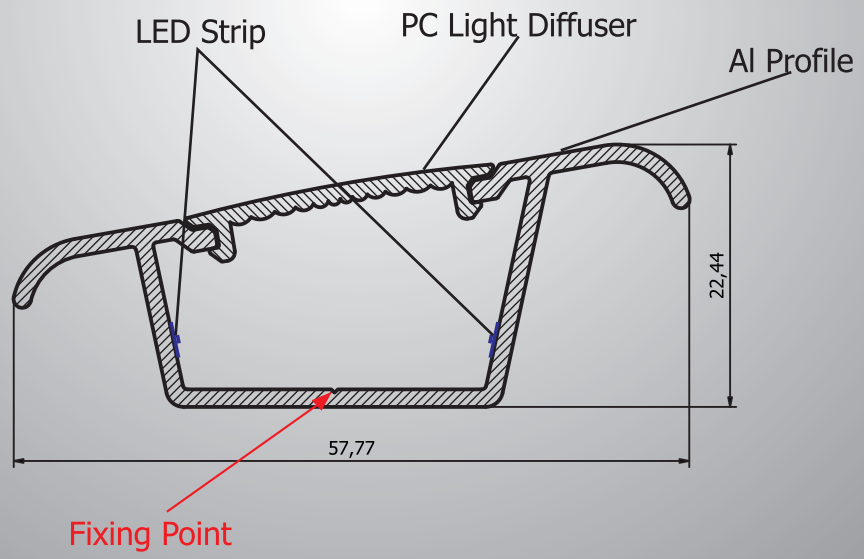

TRENDY CEILING LIGHTING

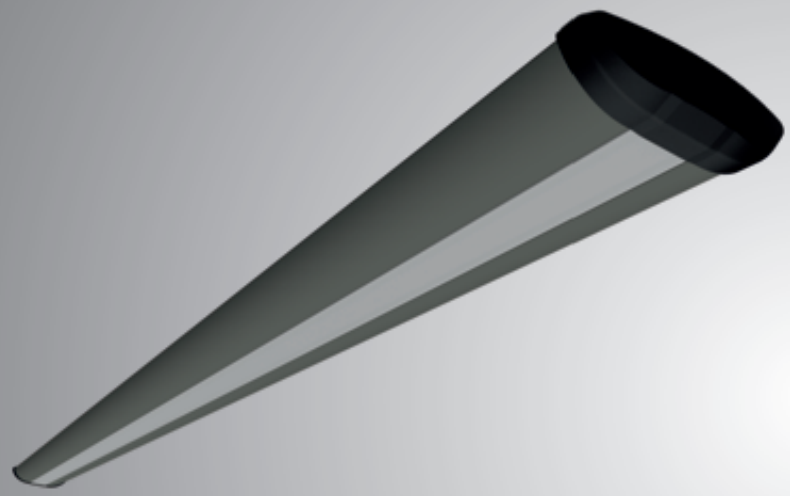

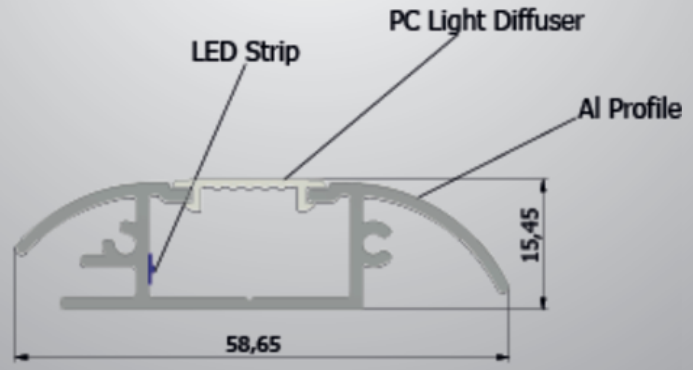

RECTANGULAR CEILING LIGHTING

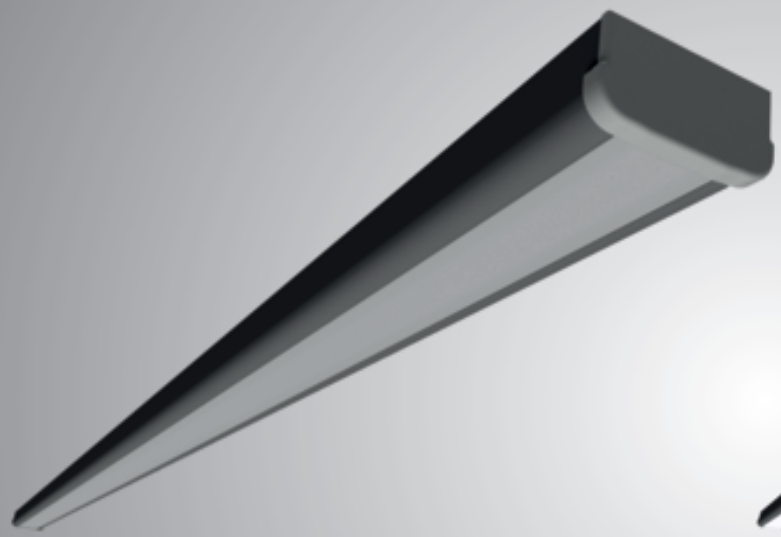

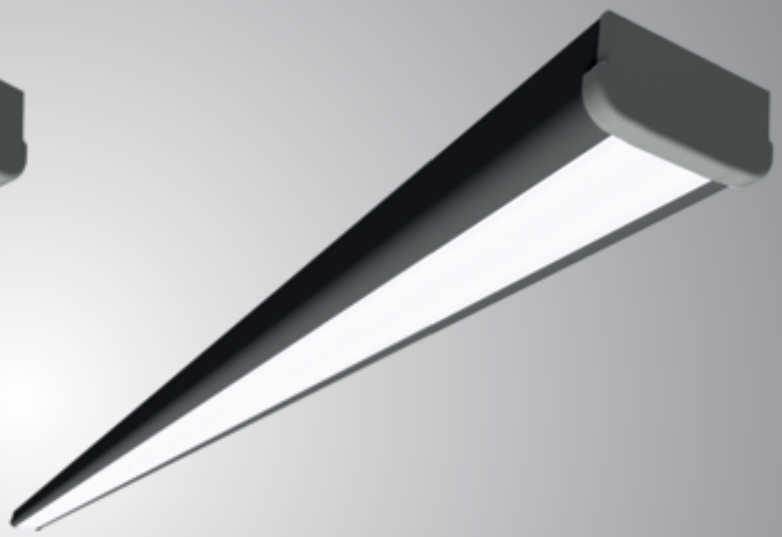

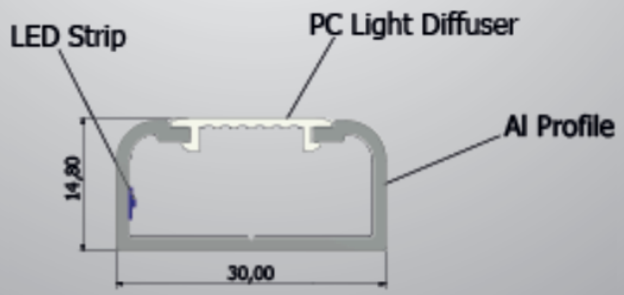

STEP LIGHTING PROFILE

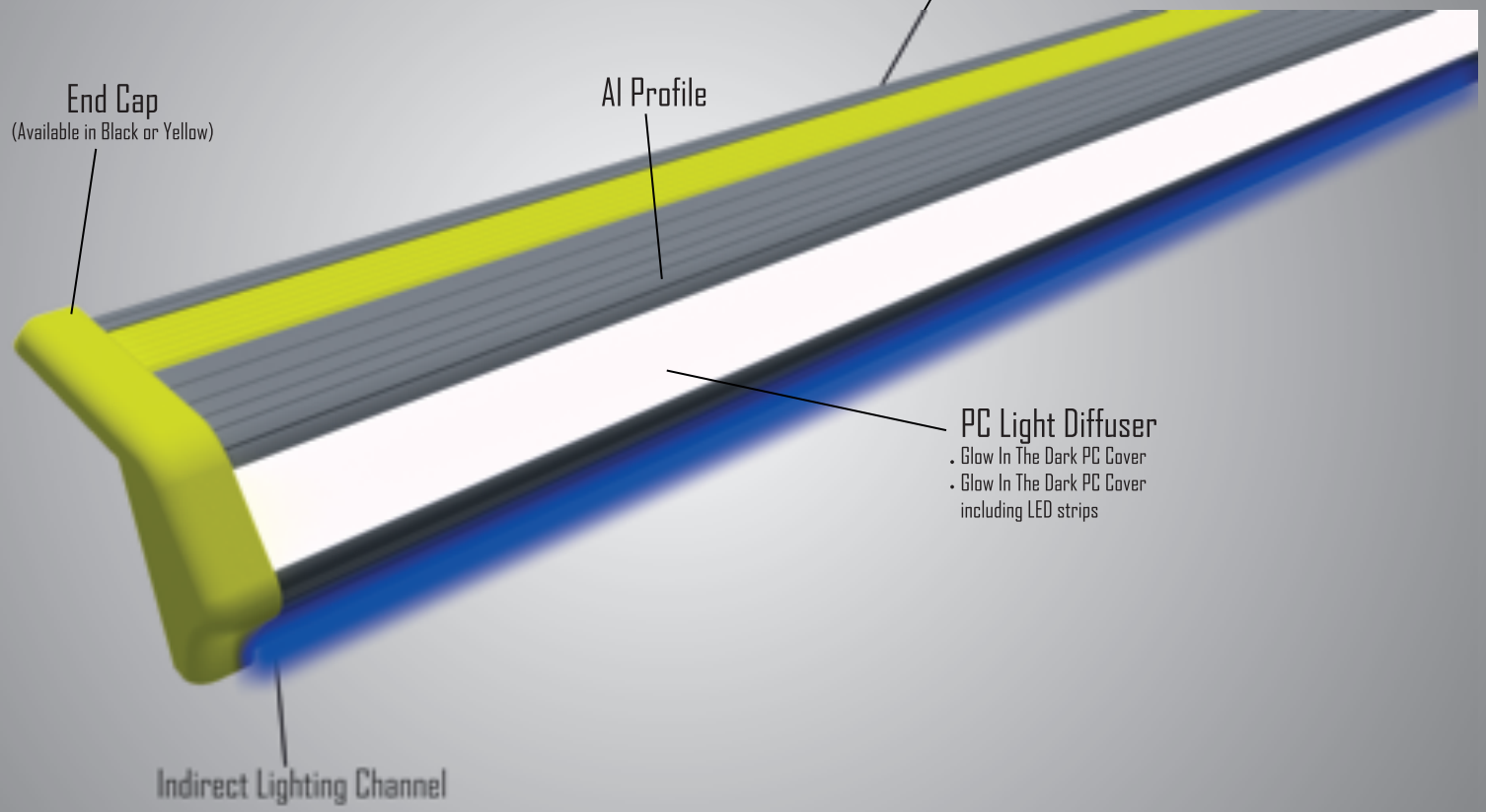

STEP LIGHTING PROFILE

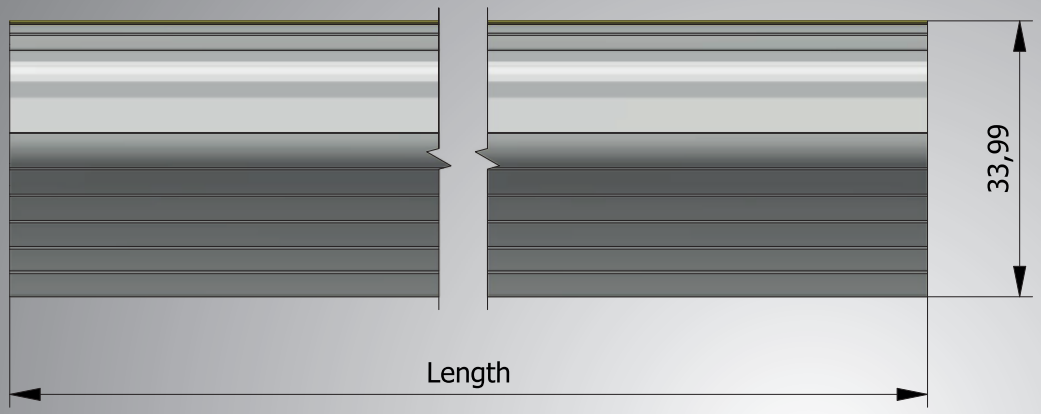

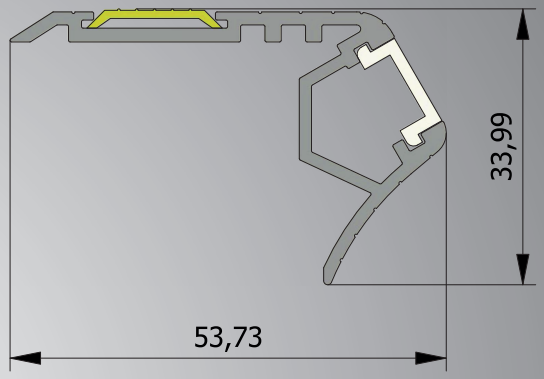

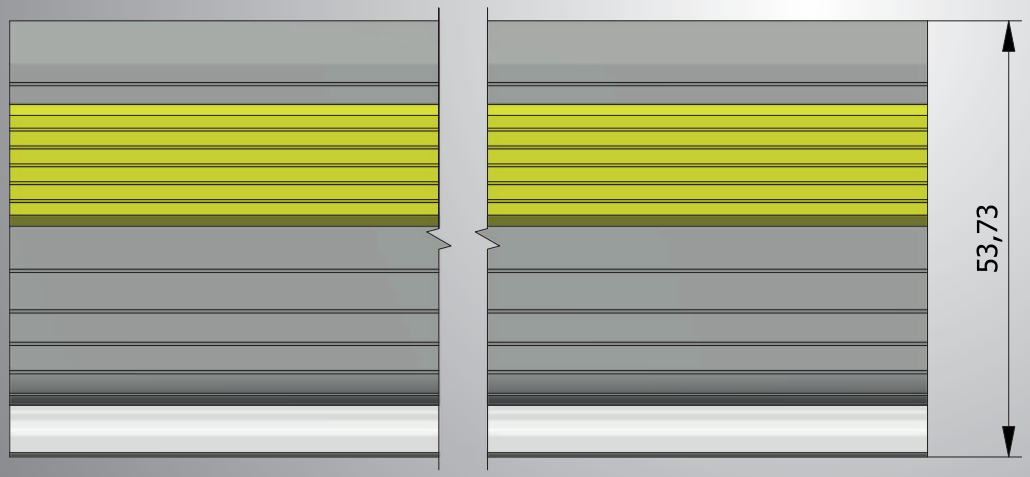

DOWNWARD LIGHTED STEP PROFILE

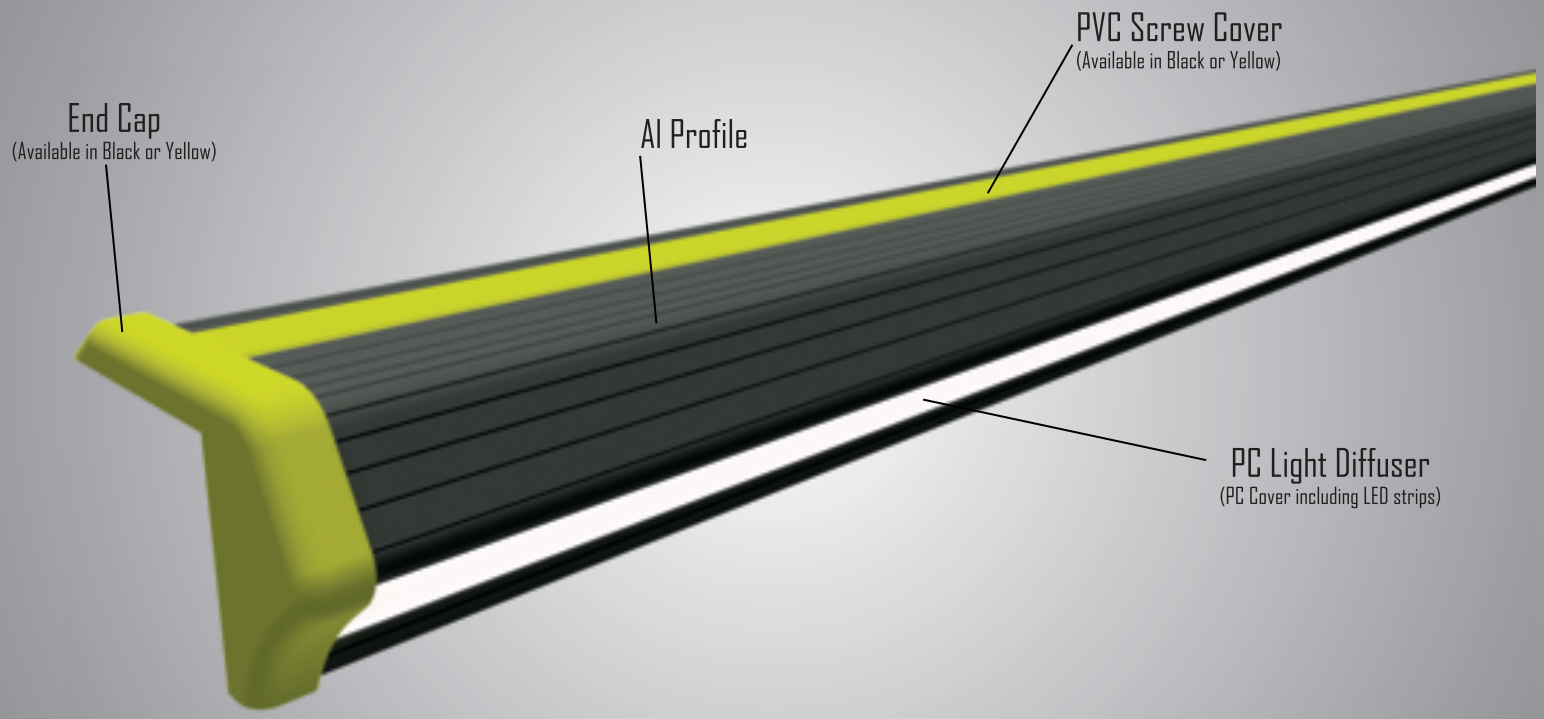

DOWNWARD LIGHTED STEP PROFILE

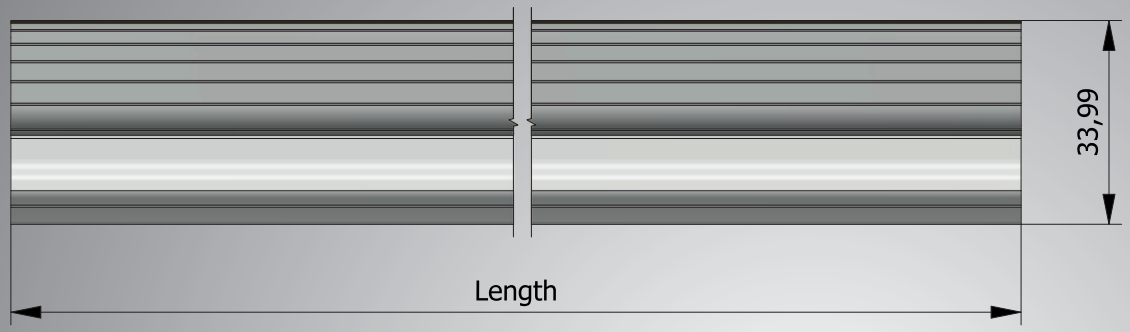

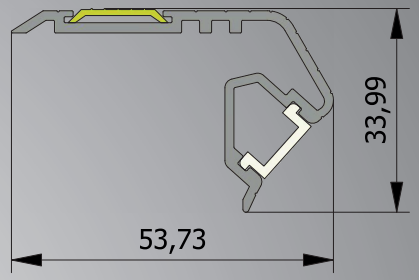

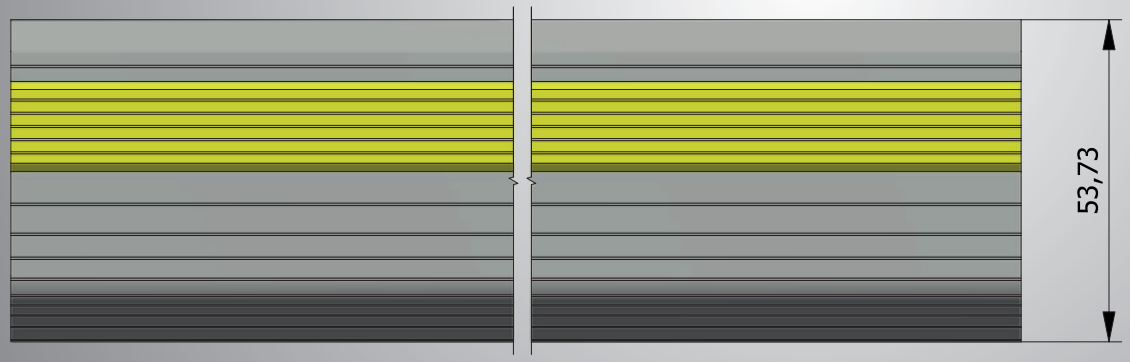

CONVEX CORNER PART 90°

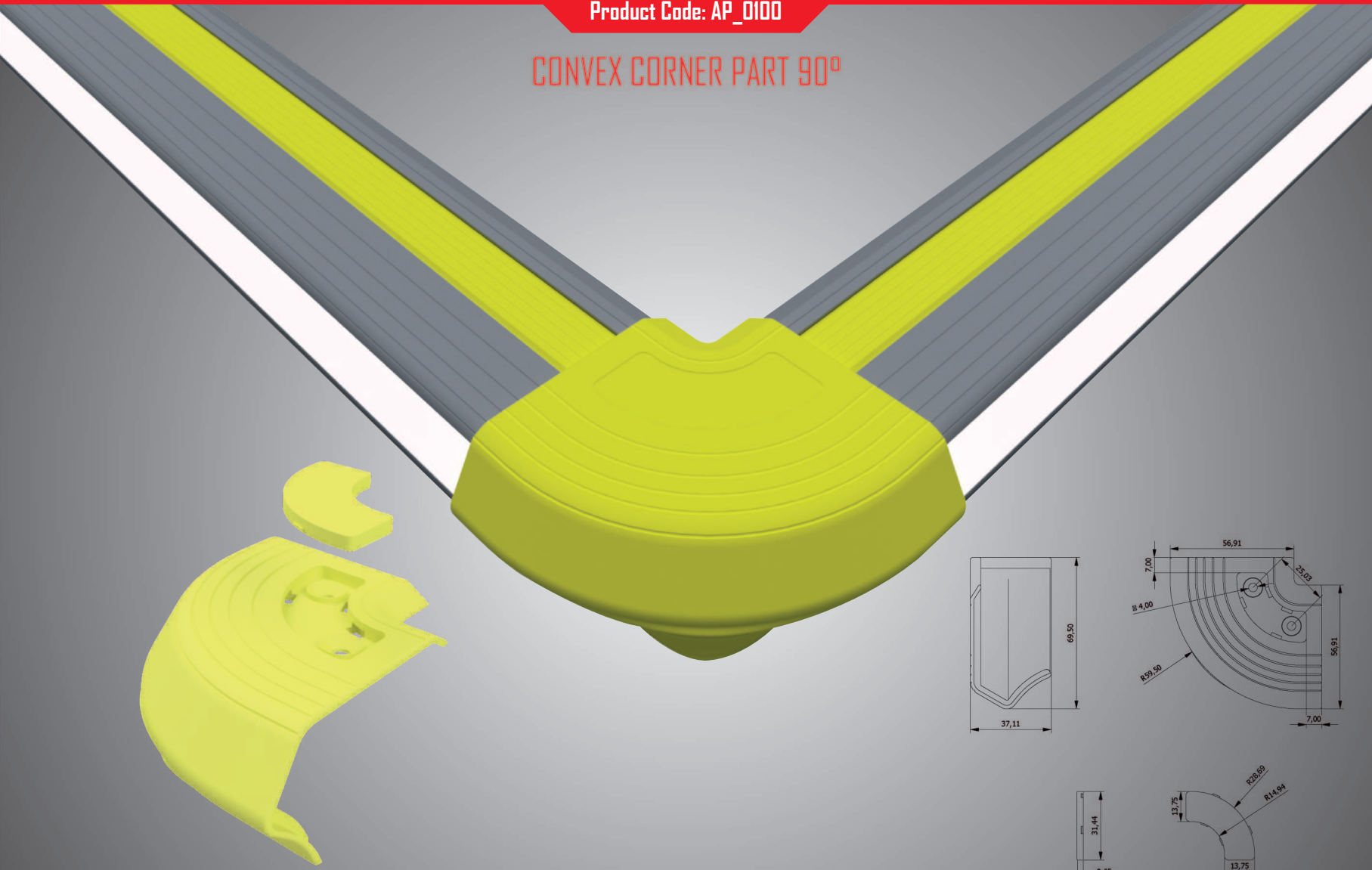

Product Code: AP_0108

CONCAVE CORNER PART 90°

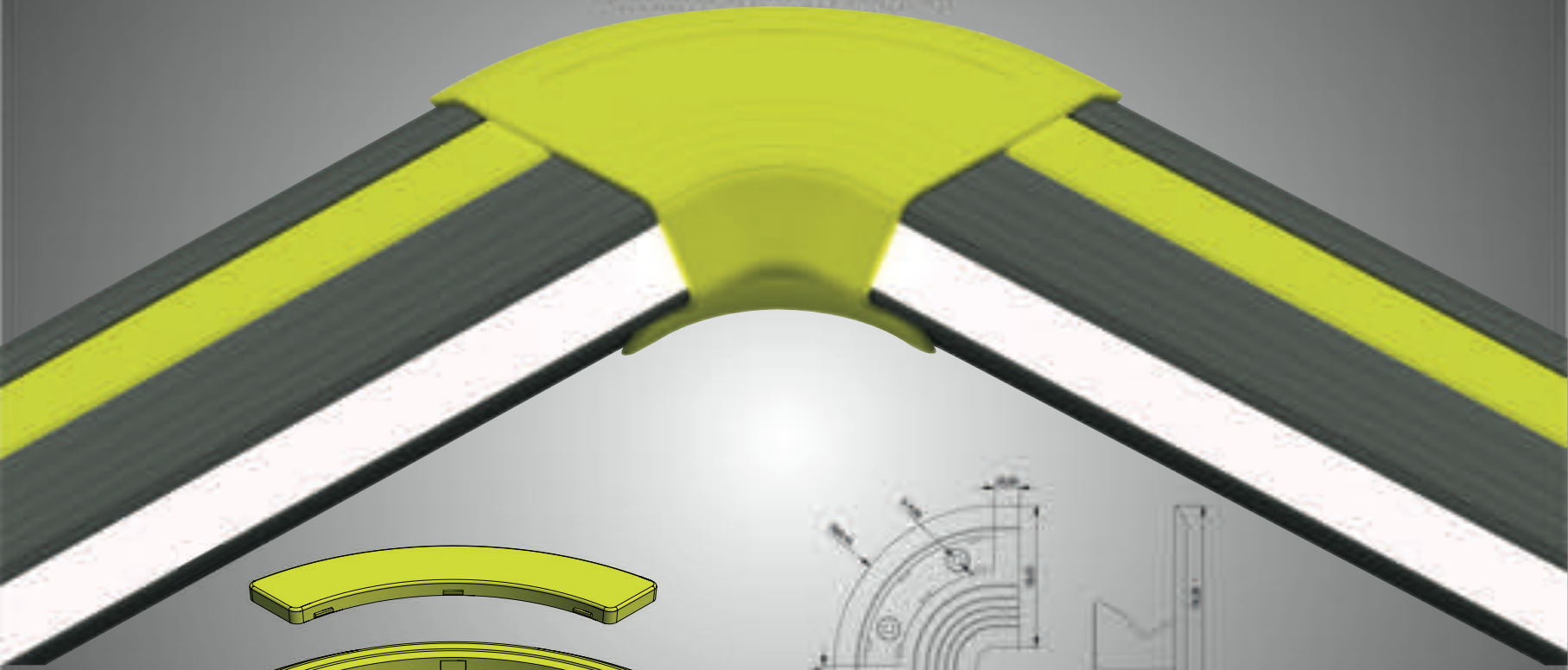

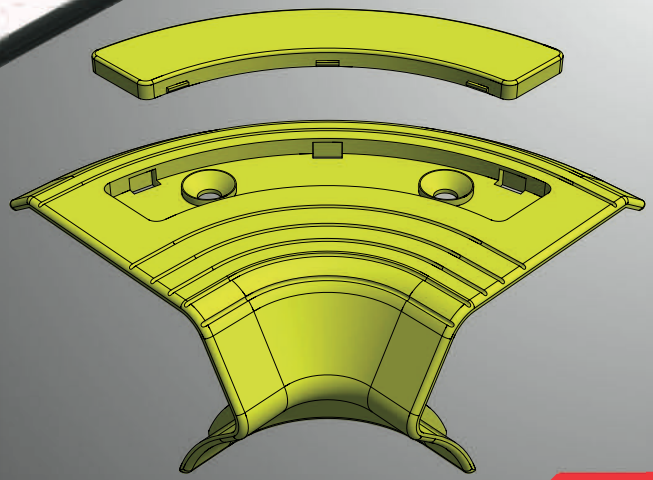

CONCAVE CORNER PART 135°

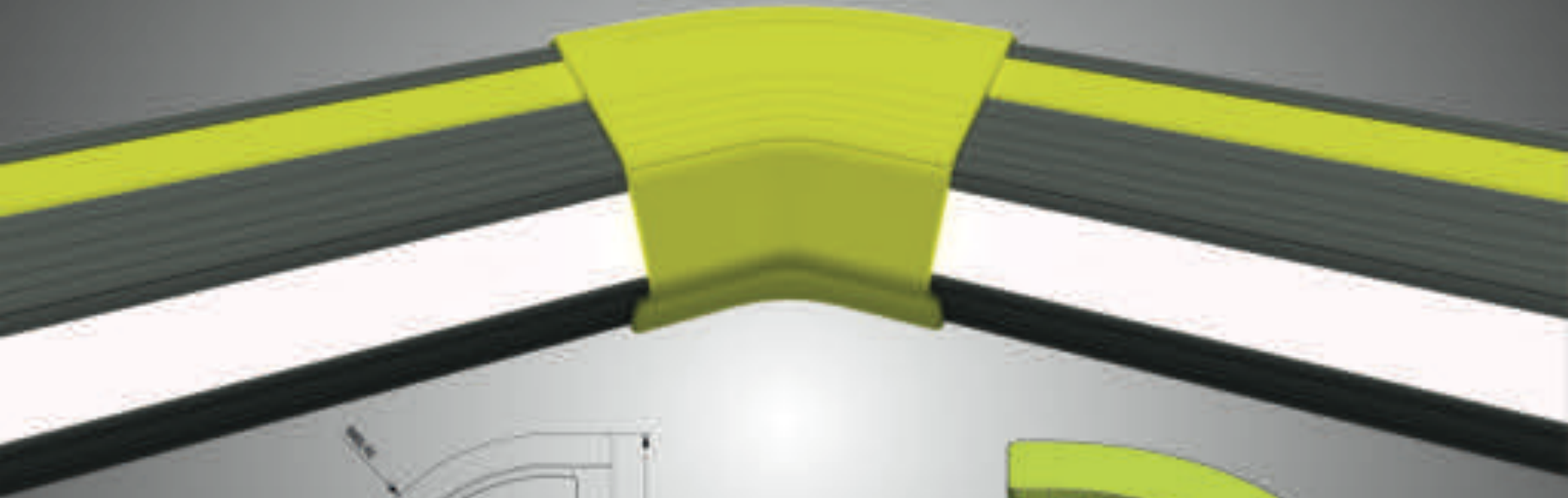

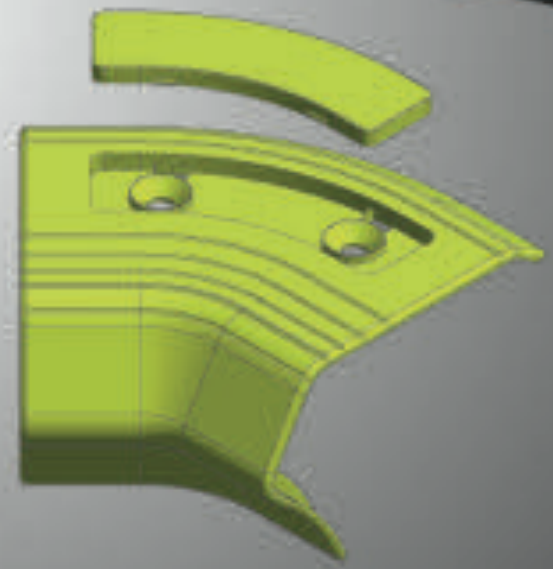

CONCAVE CORNER PART 135°

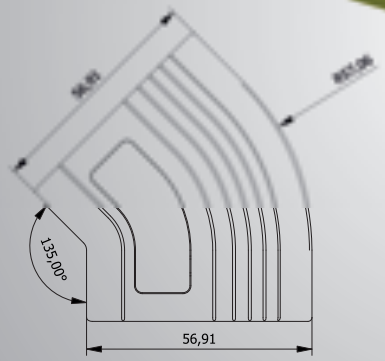

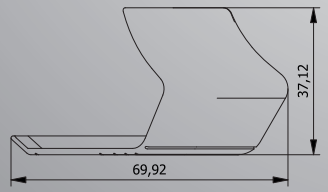

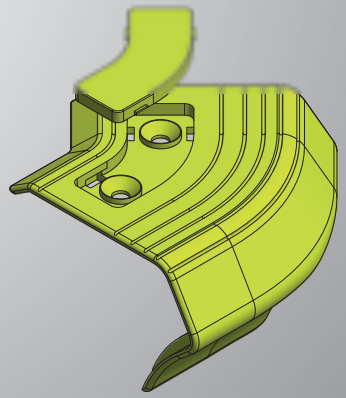

ONLY HANDRAIL PROFILE

ONLY HANDRAIL PROFILE

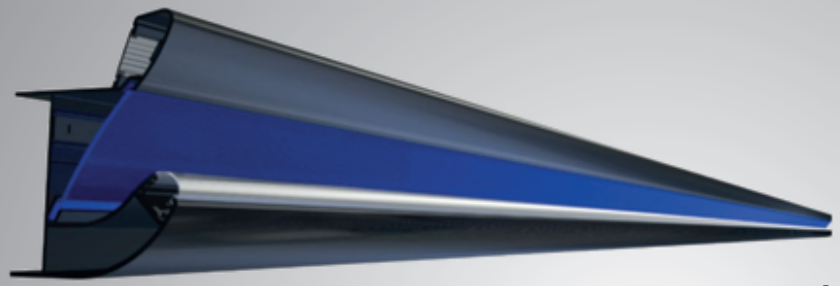

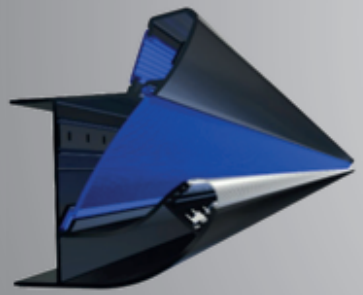

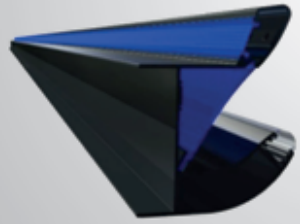

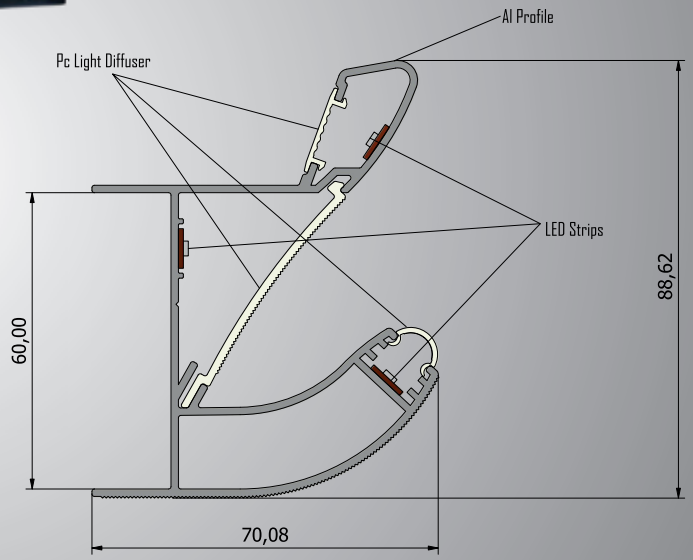

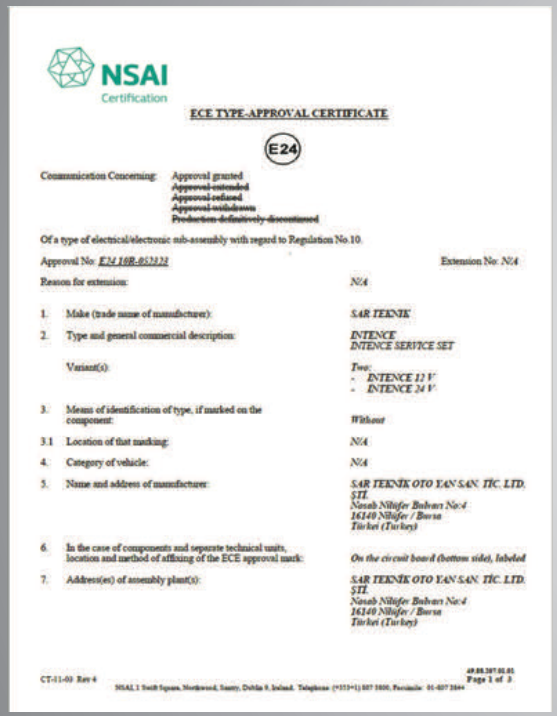

NSAI Certification

ECE TYPE-APPROVAL CERTIFICATE

E24

Communication Concerning: Approval granted
~~Approval extended~~
~~Approval refused~~
~~Approval withdrawn~~
~~Production definitively discontinued~~

Of a type of electrical/electronic sub-assembly with regard to Regulation No.10.

Approval No: *E24 10R-053232* Extension No: *N/A*

Reason for extension: *N/A*

1. Make (trade name of manufacturer): *SAR TEKNIK*
2. Type and general commercial description: *INTENCE*
   INTENCE SERVICE SET
   Variant(s): *Two:*
   - *INTENCE 12 V*
   - *INTENCE 24 V*
3. Means of identification of type, if marked on the component: *Without*
3.1 Location of that marking: *N/A*
4. Category of vehicle: *N/A*
5. Name and address of manufacturer: *SAR TEKNİK OTO YAN SAN. TİC. LTD. ŞTİ.*
   Nasuh Nilüfer Bulvarı No:4
   16140 Nilüfer / Bursa
   Türkiet (Turkey)
6. In the case of components and separate technical units, location and method of affixing of the ECE approval mark: *On the circuit board (bottom side), labeled*
7. Address(es) of assembly plant(s): *SAR TEKNİK OTO YAN SAN. TİC. LTD. ŞTİ.*
   Nasuh Nilüfer Bulvarı No:4
   16140 Nilüfer / Bursa
   Türkiet (Turkey)

CT-11-03 Rev 4

49.88.307.01.01
Page 1 of 3

NSAI, 1 Swift Square, Northwood, Santry, Dublin 9, Ireland. Telephone: (+353+1) 807 3800, Facsimile: 01-807 3844

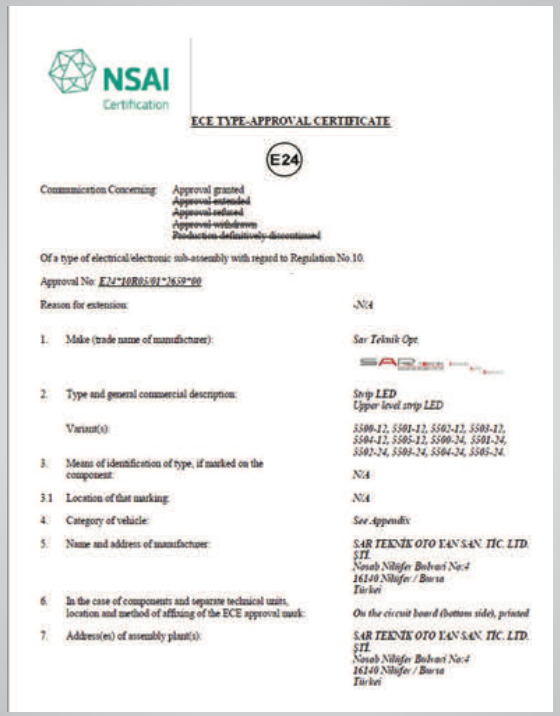

NSAI Certification

ECE TYPE-APPROVAL CERTIFICATE

E24

Communication Concerning: Approval granted
~~Approval extended~~
~~Approval refused~~
~~Approval withdrawn~~
~~Production definitively discontinued~~

Of a type of electrical/electronic sub-assembly with regard to Regulation No.10.

Approval No: *E24*10R05/01*2659*00*

Reason for extension: *N/A*

1. Make (trade name of manufacturer): *Sar Teknik Opt.*
2. Type and general commercial description: *Strip LED*
   Upper level strip LED
   Variant(s): *5500-12, 5501-12, 5502-12, 5503-12, 5504-12, 5505-12, 5500-24, 5501-24, 5502-24, 5503-24, 5504-24, 5505-24.*
3. Means of identification of type, if marked on the component: *N/A*
3.1 Location of that marking: *N/A*
4. Category of vehicle: *See Appendix*
5. Name and address of manufacturer: *SAR TEKNİK OTO YAN SAN. TİC. LTD. ŞTİ.*
   Nasuh Nilüfer Bulvarı No:4
   16140 Nilüfer / Bursa
   Türkiet
6. In the case of components and separate technical units, location and method of affixing of the ECE approval mark: *On the circuit board (bottom side), printed*
7. Address(es) of assembly plant(s): *SAR TEKNİK OTO YAN SAN. TİC. LTD. ŞTİ.*
   Nasuh Nilüfer Bulvarı No:4
   16140 Nilüfer / Bursa
   Türkiet

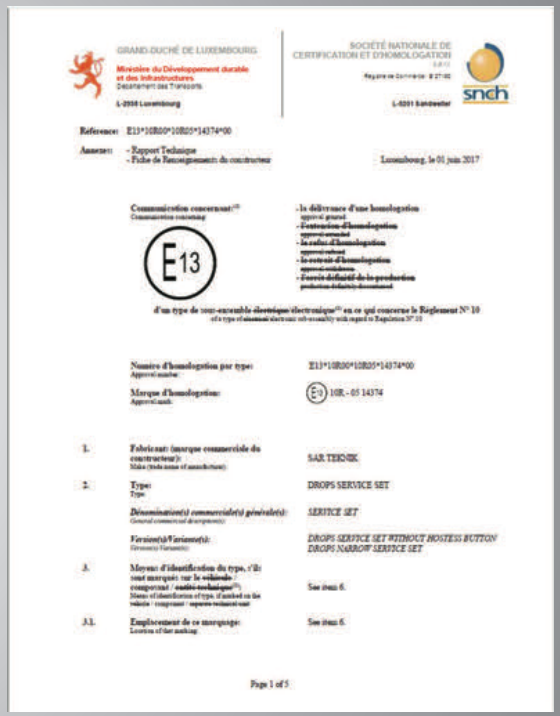

GRAND-DUCHÉ DE LUXEMBOURG
Ministère du Développement durable et des Infrastructures
Département des Transports
L-2938 Luxembourg

SOCIÉTÉ NATIONALE DE CERTIFICATION ET D'HOMOLOGATION
L-4801 Rodange

snch

Reference: E13*10R00*10R05*14374*00

Annexes: - Rapport Technique
- Fiche de Renseignements du constructeur

Luxembourg, le 01 juin 2017

Communication concernant:
Communication concerning:

- la délivrance d'une homologation
approval granted
- ~~l'extension d'homologation~~
~~approval extended~~
- le refus d'homologation
~~approval refused~~
- le retrait d'homologation
~~approval withdrawn~~
- ~~l'arrêt définitif de la production~~
~~production definitively discontinued~~

E13

d'un type de sous-ensemble ~~électrique/électronique~~ en ce qui concerne le Règlement N° 10
of a type of ~~electrical/electronic~~ sub-assembly with regard to Regulation N° 10

Numéro d'homologation par type: E13*10R00*10R05*14374*00
Approval number:

Marque d'homologation: E13 10R - 05 14374
Approval mark:

1. Fabricant: (marque commerciale du constructeur): SAR TEKNIK
   Make (trade name of manufacturer):
2. Type: DROPS SERVICE SET
   Type:
   Dénomination(s) commerciale(s) générale(s): SERVICE SET
   General commercial description(s):
   Version(s)/Variante(s): DROPS SERVICE SET WITHOUT HOSTESS BUTTON
   DROPS NARROW SERVICE SET
   Version(s)/Variant(s):
3. Moyens d'identification du type, s'ils sont marqués: sur le sous-ensemble / ~~sur le véhicule~~ / composant / ~~sur le véhicule~~ / ~~sur le composant~~ / ~~sur le véhicule sur le composant~~ See item 6.
   Means of identification of type, if marked on the ~~vehicle / component / vehicle/component~~
3.1. Emplacement de ce marquage: See item 6.
   Location of that marking:

Page 1 of 5

NSAI Certification

ECE TYPE-APPROVAL CERTIFICATE

E24

Communication Concerning: Approval granted
~~Approval extended~~
~~Approval refused~~
~~Approval withdrawn~~
~~Production definitively discontinued~~

Of a type of electrical/electronic sub-assembly with regard to Regulation No.10.

Approval No: *E24*10R05.01*2896*00*

Reason for extension:		*N/A*
1.	Make (trade name of manufacturer):	*SAR TEKNIK OTO YAN. SAN. REKLAM SAN. VE TIC. LTD ŞTİ.*
2.	Type and general commercial description:	*EC_6020* *Elit Usb Şarj Cihazı /Elit USB Charger*
	Variant(s):	*N/A*
3.	Means of identification of type, if marked on the component:	*Stamp on the product*
3.1	Location of that marking:	*On the product*
4.	Category of vehicle:	*See Appendix*
5.	Name and address of manufacturer:	*SAR TEKNIK OTO YAN. SAN. REKLAM SAN. VE TIC. LTD ŞTİ.*
6.	In the case of components and separate technical units, location and method of affixing of the ECE approval mark:	*See Annex A of information document*
7.	Address(es) of assembly plant(s):	*NOSAB NILÜFER BULVARI NO:4 16140 BURSA /TURKIYE*

NSAI Certification

Approval No: *E24*10R05.01*2896*00*

8.	Additional information (where applicable):	*See appendix*
9.	Technical service responsible for carrying out the tests:	*TÜV Austria Türk Belgelendirme Eğitim Ve Gözetim Hizmetleri Ltd. ŞTİ.* *Barbaros Mah. Sumer Sok.* *No:13/1 PK: 34746* *Istanbul – Turkey*
10.	Date of test report:	*28.03.2019*
11.	Number of test report:	*19-TUV-ATR-EU-0063*
12.	Remarks (if any):	*See Appendix*
13.	Place:	*Dublin*
14.	Date:	*16th August, 2019*
15.	Signature:	

16. The index to the information package lodged with the approval authority, which may be obtained on request is attached.

Certificate of Registration

This certificate has been awarded to

SAR TEKNİK OTO YAN. SAN. REKLAM SAN. VE TİC. LTD. ŞTİ.

NOSAB Nilüfer Bulvan No:4 Nilüfer BURSA, Turkey

In recognition of the organization's Quality Management System which complies with

ISO 9001:2015

The scope of activities covered by this certificate is defined below

Manufacture and Trading of Plastic Parts and Luggage Racks & Air Channels & Roller Blinds for Passenger Transport Vehicles of Automotive Industry

Certificate Number: 201175/A/9001/UK/En			
Date of Issue of Certification Cycle	Issue Number	Certificate Expiry Date	Certification Cycle
16 August 2021	2	15 August 2024	2
Revision Date	Revision Number	Original Certificate Issue Date	Scheme Number
04 August 2021	0	16 August 2018	n/a

For detailed explanation for the data fields above, refer to http://www.urs-holdings.com/logos-and-regulations

Issued by

On behalf of the Scheme Manager

CERTIFICATE

SAR TEKNİK OTO YAN SAN. VE REKLAMCILIK SAN. VE TİC. LTD. ŞTİ.

NOSAB NİLÜFER BULVARI NO:4 NİLÜFER/BURSA

has implemented and maintains a **Environmental Management System**

MANUFACTURING OF ACCESORIES AND OTHER PARTS FOR MOTOR LAND VEHICLES

EA 29

Through an audit, documented in a report, it was verified that the management System fulfills the requirements of the following standard:

ISO 14001:2015

Certificate registration no	QA-D/TUR/14001/0833
Valid from	11.03.2022
Valid until	11.03.2023
Date of original certification	11.03.2022
Certification cycle	3 years

Yurtdışı Operasyon Müdürü
Begüm ASIKKAN
Stuttgart 2022.03.11

ALBERA QA TECHNIC GMBH
Theodor Heuss Straße 8 D-70175
Stuttgart GERMANY
Tel. +49 711 6454 5821 · Fax +49 711 6454 4446
www.qatechnic.de

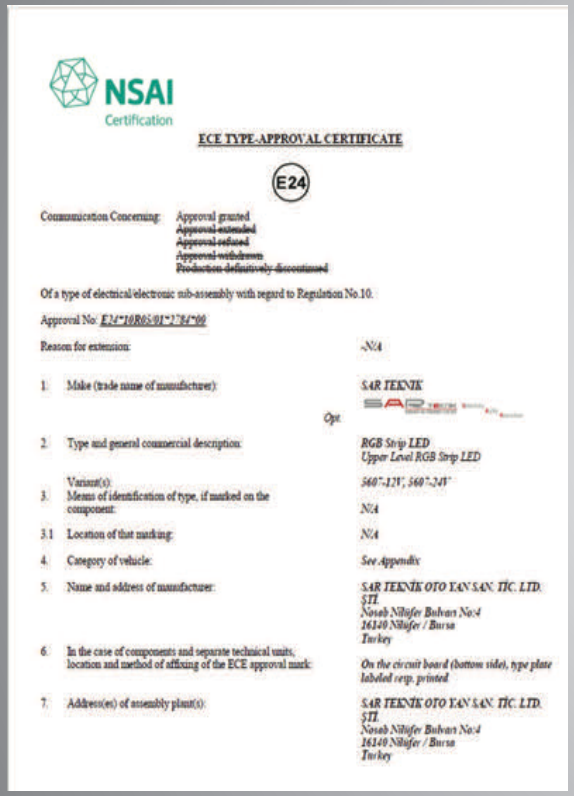

NSAI Certification

ECE TYPE-APPROVAL CERTIFICATE

E24

Communication Concerning: Approval granted
~~Approval extended~~
~~Approval refused~~
~~Approval withdrawn~~
~~Production definitively discontinued~~

Of a type of electrical/electronic sub-assembly with regard to Regulation No.10.

Approval No: E24*10R05/01*2784*00

Reason for extension: -N/A

1. Make (trade name of manufacturer): SAR TEKNIK

Opt

2. Type and general commercial description: RGB Strip LED
Upper Level RGB Strip LED

Variant(s): S607-12V, S607-24V

3. Means of identification of type, if marked on the component: N/A

3.1 Location of that marking: N/A

4. Category of vehicle: See Appendix

5. Name and address of manufacturer: SAR TEKNİK OTO YAN SAN. TİC. LTD. ŞTİ.
Nosab Nilüfer Bulvarı No:4
16140 Nilüfer / Bursa
Turkey

6. In the case of components and separate technical units, location and method of affixing of the ECE approval mark: On the circuit board (bottom side), type plate labeled resp. printed

7. Address(es) of assembly plant(s): SAR TEKNİK OTO YAN SAN. TİC. LTD. ŞTİ.
Nosab Nilüfer Bulvarı No:4
16140 Nilüfer / Bursa
Turkey

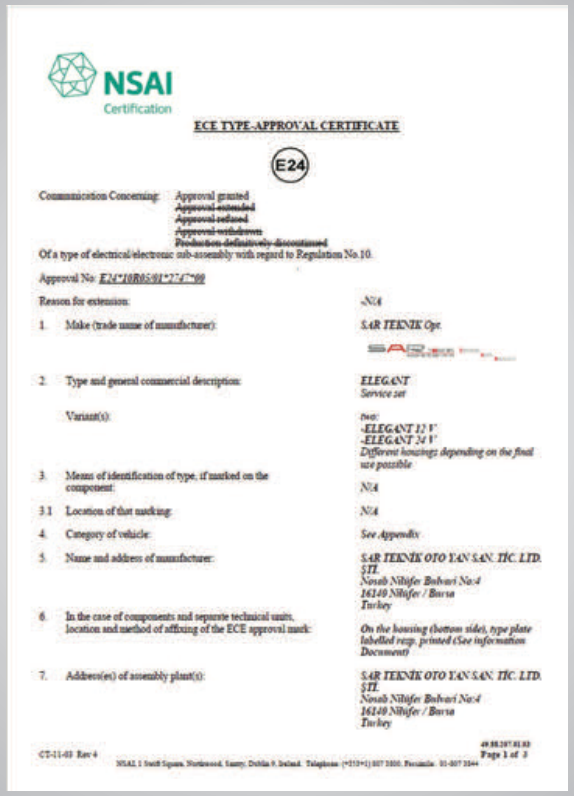

NSAI Certification

ECE TYPE-APPROVAL CERTIFICATE

E24

Communication Concerning: Approval granted
~~Approval extended~~
~~Approval refused~~
~~Approval withdrawn~~
~~Production definitively discontinued~~

Of a type of electrical/electronic sub-assembly with regard to Regulation No.10.

Approval No: E24*10R05/01*2784*00

Reason for extension: -N/A

1. Make (trade name of manufacturer): SAR TEKNIK Opt.

2. Type and general commercial description: ELEGANT
Service set

Variant(s): two:
-ELEGANT 12 V
-ELEGANT 24 V
Different housings depending on the final use possible

3. Means of identification of type, if marked on the component: N/A

3.1 Location of that marking: N/A

4. Category of vehicle: See Appendix

5. Name and address of manufacturer: SAR TEKNİK OTO YAN SAN. TİC. LTD. ŞTİ.
Nosab Nilüfer Bulvarı No:4
16140 Nilüfer / Bursa
Turkey

6. In the case of components and separate technical units, location and method of affixing of the ECE approval mark: On the housing (bottom side), type plate labelled resp. printed (See information Document)

7. Address(es) of assembly plant(s): SAR TEKNİK OTO YAN SAN. TİC. LTD. ŞTİ.
Nosab Nilüfer Bulvarı No:4
16140 Nilüfer / Bursa
Turkey

49.88.287.81.83
Page 1 of 2

CT-11-03 Rev 4

NSAI, 1 Swift Square, Northwood, Santry, Dublin 9, Ireland. Telephone: (+353+1) 807 3800. Facsimile: 01-807 3844

GreaTest Belgelendirme A.Ş.

GT-23-064-C

UYGUNLUK ONAYI

ATTESTATION OF CONFORMITY

YANMA DAVRANIŞI YÖNETMELİĞİ (BM/AEK R-118)
BURNING BEHAVIOUR DIRECTIVE (ECE R-118)

ELEKTROMANYETİK UYUMLULUK YÖNETMELİĞİ (BM/AEK R-10)
ELECTROMAGNETIC COMPABILITY DIRECTIVE (ECE R-10)

SAR TEKNİK OTO YAN SANAYİ VE REKLAMCILIK SAN. VE TIC. LTD.ŞTİ.
Minareiçavuş OSB Mah. Nilüfer Bulvarı No:4 Nilüfer Bursa /TURKEY

Ürünün Tanımı / Description of the Product/Part: Ledli Sepetlik ve Hava Kanalı Sistemi / Led Basket and Air Duct System

Markası / Commercial Brand: SAR TEKNİK

Ürün Tipi / Product Type: Ledli Sepetlik ve Hava Kanalı Sistemi / Led Basket and Air Duct System

Uygulanabilir AT Direktifleri / Applicable EU Directives: BM/AEK R-118, BM/AEK R-10 / ECE R-118, ECE R-10

Uygulanabilir Harmonize Standartlar
Uygulanabilir Ulusal Standartlar
Ve Teknik Spesifikasyonlar
Applicable Harmonized Standards
Applicable National Standards
And Technical Specifications

Rapor No & Tarihi / Report No & Date: GT-23-064, 09.08.2023

İşbu belge incelemesi yapılan ürün tasarımı için geçerlidir. Ürünün değiştirilmesi halinde geçerliliğini kaybedecektir. Ürünün ilgili direktif/direktiflere uygunluğu ile ilgili nihai sorumluluk üretici firmaya aittir.
The Present certificate is valid just for the analysed product design. The Certificate shall lose its validity in case of any changes in the product. Ultimate responsibility related with conformity of product with directive / directives, belongs to manufacturer.

İlgili yönetmelikler ve yasal mevzuat gereği ürünlere CE işareti iliştirilmesi ile ilgili nihai sorumluluk üreticiye aittir.
Ultimate Responsibility regarding the affixing of CE mark according to relevant regulations and legal legislation, belongs manufacturer.

Sertifika Yayın Tarihi / Certificate Issue Date: 10.08.2023
Geçerlilik Tarihi / Validity Date: 10.08.2024

Berkay Hür Akbaba
Yönetim Kurulu Başkanı
Chairman of Executive Board

SAR TEKNIK OTO YAN SAN REKLAMCILIK VE SANAYI TIC.LTD.STI
Minarelicavus OSB Mah. , Nilufer Bulvari No: 4 , 16140 Nilüfer/BURSA/TURKEY
Gsm: +90 533 147 66 05 TEL:+90 (0) 224 443 46 71-72
Fax: +90 (0) 224 443 46 73 e-mail: sales@sarteknik.com